CH-POE

PoE/PoH Power Injector

HDBaseT has a large share in the transmission market of uncompressed images. In consideration of simplified installation, we designed and manufactured CH-POE products, allowing SI to simplify installation complexity and improve the practicality of HDBaseT products. This Power Over Ethernet (PoE) injector is designed to easily deliver power to HDBaseT products through Ethernet cables using standard IEEE 802.3af Power over Ethernet. The CH-POE can send power only in the required direction by the two power switches, it also allows to route powers to up-stream and down-stream and can be operated simultaneously. The power supply is a cost saving equipment and can be conveniently installed anywhere when used with HDBsaeT-equipped products.

PANELS

Front View

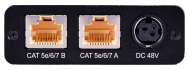

Rear View

DIAGRAM

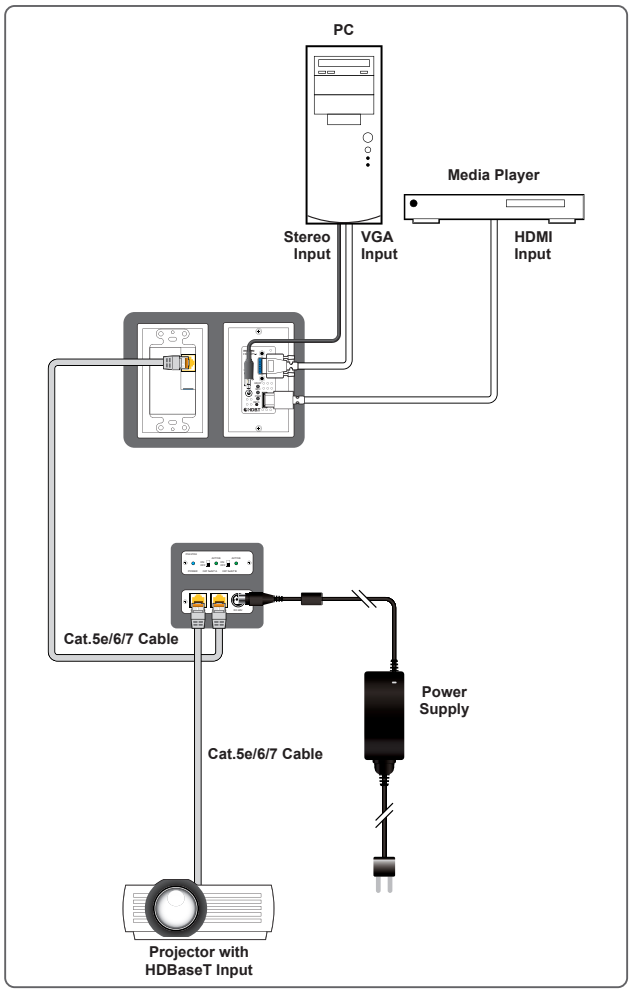

FEATURES

- Supports DC 48V to products using IEEE 802.3af Power over Ethernet
- Supports power over Ethernet with a distance of up to 100 meters
- Features power switches to selectively the power direction
- Supports interoperable powered devices (PD) and power sourcing equipment (PSE)
- Supports 10.2 Gbp bandwidth, 4K ultra-high resolutions signals and multi-channel audio formats

SPECIFICATIONS

Interfaces		
Input Port	1 CAT5e/6/7 (RJ45)	
Output Port	1 CAT5e/6/7 (RJ45)	
Video		
HDCP Compliance	2.x	
Input Signal Type	4096x2160p@60 8bit YUV 4:2:0	
Output Signal Type	4096x2160p@60 8bit YUV 4:2:0	
		Resolutions
Maximum Input	HDBaseT	4096×2160p@60 YUV 4:2:0
Maximum Output	HDBaseT	4096×2160p@60 YUV 4:2:0
Power		
Power Supply	DC 48V/0.83A (Locking)	
Power Consumption	10.6w	
Enclosure		
Chassis Material	Metal (Alumium)	
Chassis Color	Black	
Dimensions (W×H×D)	71mm×72mm×23mm [Case Only] 71mm×76mm×23mm [All Inclusive]	
Weight	130g	

ORDERING INFORMATION

Model No.	Product Description
CH-POE	PoE/PoH Power Injector
CH-2537TXWPUS	UHD+ HDMI/VGA over HDBaseT Wallplate Switcher with Signal Event Automation (1 Gang US)
CH-2538TXPLWPKD	UHD+ HDMI/VGA over HDBaseT Wallplate Switcher with PoH (PD) (2 Gang UK)