Lideo

# Lideo SP12SA2-8K

48Gbps HDMI eARC Audio to Soundbar Adapter

**USER MANUAL**

## Thank you for purchasing this product

For optimum performance and safety, please read these instructions carefully before connecting, operating or adjusting this product. Please keep this manual for future reference.

## Surge protection device recommended

This product contains sensitive electrical components that may be damaged by electrical spikes, surges, electric shock, lighting strikes, etc. Use of surge protection systems is highly recommended in order to protect and extend the life of your equipment.

## Table of Contents


**1. Introduction.....1**

**2. Features.....1**

**3. Package Contents.....2**

**4. Specifications.....2**

**5. Operation Controls and Functions.....4**

**6. Application Example.....6**

# 1. Introduction

This HDMI eARC Audio to Soundbar Adapter is designed for de-embedding audio signals from an HDMI source or TV with ARC/eARC to output HDMI audio to Soundbar. It supports data rates up to 48Gbps complying with HDMI 2.1 and HDCP 2.3 requirements. It is compatible with UHDTV 8K@60Hz. It includes several features for ease of integration, such as EDID management and cable equalization. It provides an easy solution for HDMI installations to send audio signals to a Soundbar. CEC control from TV to the source and Soundbar is also supported.

# 2. Features

☆ HDMI 2.1 and HDCP 2.3 compliant
☆ Support 48Gbps FRL and 18Gbps TMDS video bandwidth
☆ Support video resolution up to 8K@60Hz 4:2:0 12bit, 4K@120Hz 4:4:4 12bit
☆ HDMI 2.1 protocols: VRR, ALLM, QMS, QFT, SBTM are supported
☆ HDR, HDR 10, HDR 10+, Dolby Vision, HLG pass-through
☆ LPCM 7.1CH, Dolby TrueHD, Atmos and DTS-HD Master, DTS:X Audio pass-through
☆ HDMI input audio or TV eARC audio de-embedded to any Soundbar
☆ Full audio up to Dolby Atmos/DTS:x from eARC TV to SONOS ARC & Beam or any eARC Soundbar
☆ Support CEC control from TV to the source and Soundbar
☆ Support CEC volume control from TV to any sound system
☆ Advanced EDID management

# 3. Package Contents

① 1 × 48Gbps HDMI eARC Audio to Soundbar Adapter

② 1 × 5V/1A Multinational Power Supply

③ 1 × User Manual

# 4. Specifications

| **Technical** | |
|---|---|
| HDMI Compliance | HDMI 2.1 |
| HDCP Compliance | HDCP 2.3 |
| Video Bandwidth | 48Gbps FRL and 18Gbps TMDS |
| Video Resolution | Up to 8K@60Hz 4:2:0 12bit, 4K@120Hz 4:4:4 12bit |
| Audio Latency | No Latency |
| Video Latency | No Latency |
| Color Depth | 8/10/12bit |
| Color Space | RGB_4:4:4, YCbCr_4:4:4, YCbCr_4:2:2, YCbCr_4:2:0 |
| Audio Formats | **HDMI IN/OUT:**<br>LPCM, Dolby Digital/Plus/EX, Dolby True HD, Dolby Atmos, DTS, DSD, DTS-EX, DTS-96/24, DTS High Res, DTS-HD Master Audio, DTS:X<br>**eARC AUDIO OUT:**<br>LPCM, Dolby Digital/Plus/EX, Dolby True HD, Dolby Atmos, DTS, DSD, DTS-EX, DTS-96/24, DTS High Res, DTS-HD Master Audio, DTS:X |
| HDR | HDR, HDR10, HDR10+, Dolby Vision, HLG |
| ESD Protection | IEC 61000-4-2:<br>±8kV (Air-gap discharge) & ±4kV (Contact discharge) |

| **Connection** | |
|---|---|
| Input | 1 × Source IN [HDMI Type A, 19-pin female] |
| Output | 1 × TV(eARC) OUT [HDMI Type A, 19-pin female]<br>1 × Soundbar eARC OUT [HDMI Type A, 19-pin female] |
| Control | 1 × SERVICE [USB Type C, Update port] |
| **Mechanical** | |
| Housing | Metal Enclosure |
| Color | Black |
| Dimensions | 95mm [W] × 68mm [D] × 18mm [H] |
| Weight | 178g |
| Power Supply | Input: AC 100-240V 50/60Hz, Output: DC 5V/1A<br>(US/EU standards, CE/FCC/UL certified) |
| Power Consumption | 4.13W (Max) |
| Operation Temperature | 0°C ~ 40°C / 32°F ~ 104°F |
| Storage Temperature | -20°C ~ 60°C / -4°F ~ 140°F |
| Relative Humidity | 20~90% RH (non-condensing) |

| **Recommended HDMI Cable** | | | | |
|---|---|---|---|---|
| **Video Resolution** | 8K60 | 4K60 | 4K30 | 1080P |
| **HDMI Cable Length**<br>(HDMI IN / OUT) | 2m/6.6ft ~ 3m/10ft<br>(Ultra HDMI 2.1) | 5m/16ft | 10m/33ft | 15m/49ft |
| The use of “Premium High Speed HDMI” cable is highly recommended. | | | | |

# 5. Operation Controls and Functions

## Front Panel

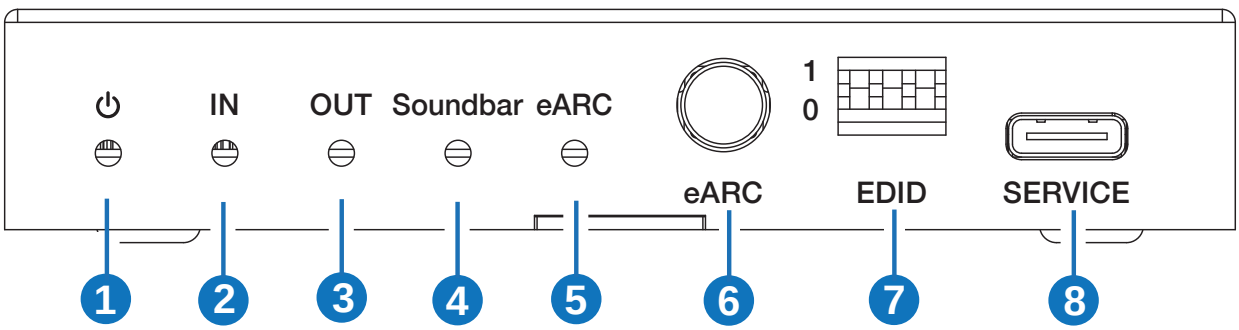


| No. | Name | Function Description |
|---|---|---|
| 1 | Power LED | When the device is powered on, the red LED will be on. |
| 2 | IN LED | When the input signal is detected, the green LED will be on. |
| 3 | OUT LED | When the OUT port connects to a TV, the green LED will be on. |
| 4 | Soundbar LED | When the eARC OUT port connects to a soundbar, the green LED will be on. |
| 5 | eARC LED | ▪ **On:** The ARC/eARC function is turned on. CEC communication and ARC/eARC is working properly.<br>▪ **Flashing:** The ARC/eARC function is turned on. CEC communication and ARC/eARC is not working properly.<br>▪ **Off:** The ARC/eARC function is turned off. |
| 6 | eARC button | Press this button to enable or disable the eARC function. |
| 7 | EDID DIP switch | Use the DIP switch to set EDID.<br>[DIP]=111: Copy OUT port sink video and audio EDID<br>[DIP]=110: Copy OUT port sink video EDID, Audio 7.1CH<br>[DIP]=101: FRL12G_8K_HDR, 2.0CH<br>[DIP]=100: FRL12G_8K_HDR, 5.1CH<br>[DIP]=011: FRL12G_8K_HDR, 7.1CH<br>[DIP]=010: FRL10G_8K_HDR, 2.0CH<br>[DIP]=001: FRL10G_8K_HDR, 5.1CH<br>[DIP]=000: FRL10G_8K_HDR, 7.1CH |
| 8 | SERVICE | Firmware update and debug port. |

## Rear Panel

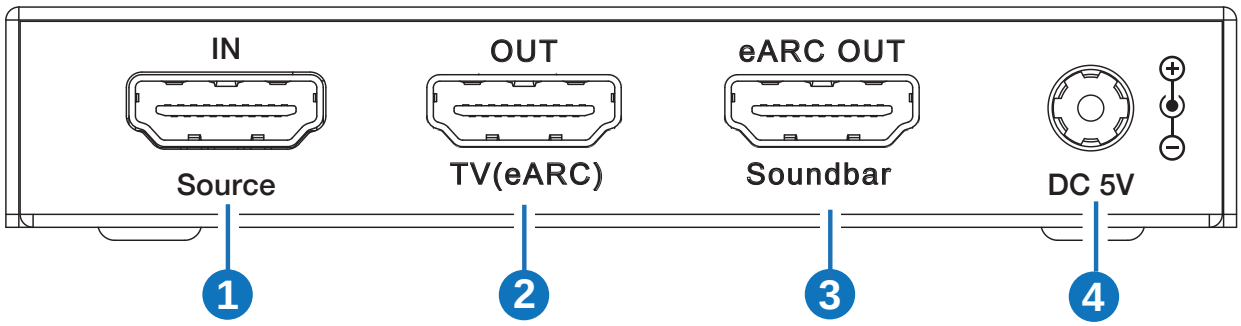


| No. | Name | Function Description |
|---|---|---|
| 1 | Source IN port | HDMI signal input port, connected to HDMI source device such as DVD, PS5 or 8K computer host with an HDMI cable. |
| 2 | TV(eARC) OUT port | HDMI signal output port, connected to TV (ARC/eARC) with an HDMI cable. It can be used as an ARC/eARC audio channel when the ARC function is enabled. |
| 3 | Soundbar eARC OUT | HDMI audio output port, connected to a soundbar with an HDMI cable. |
| 4 | DC 5V | DC 5V/1A power input port. |

# 6. Application Example

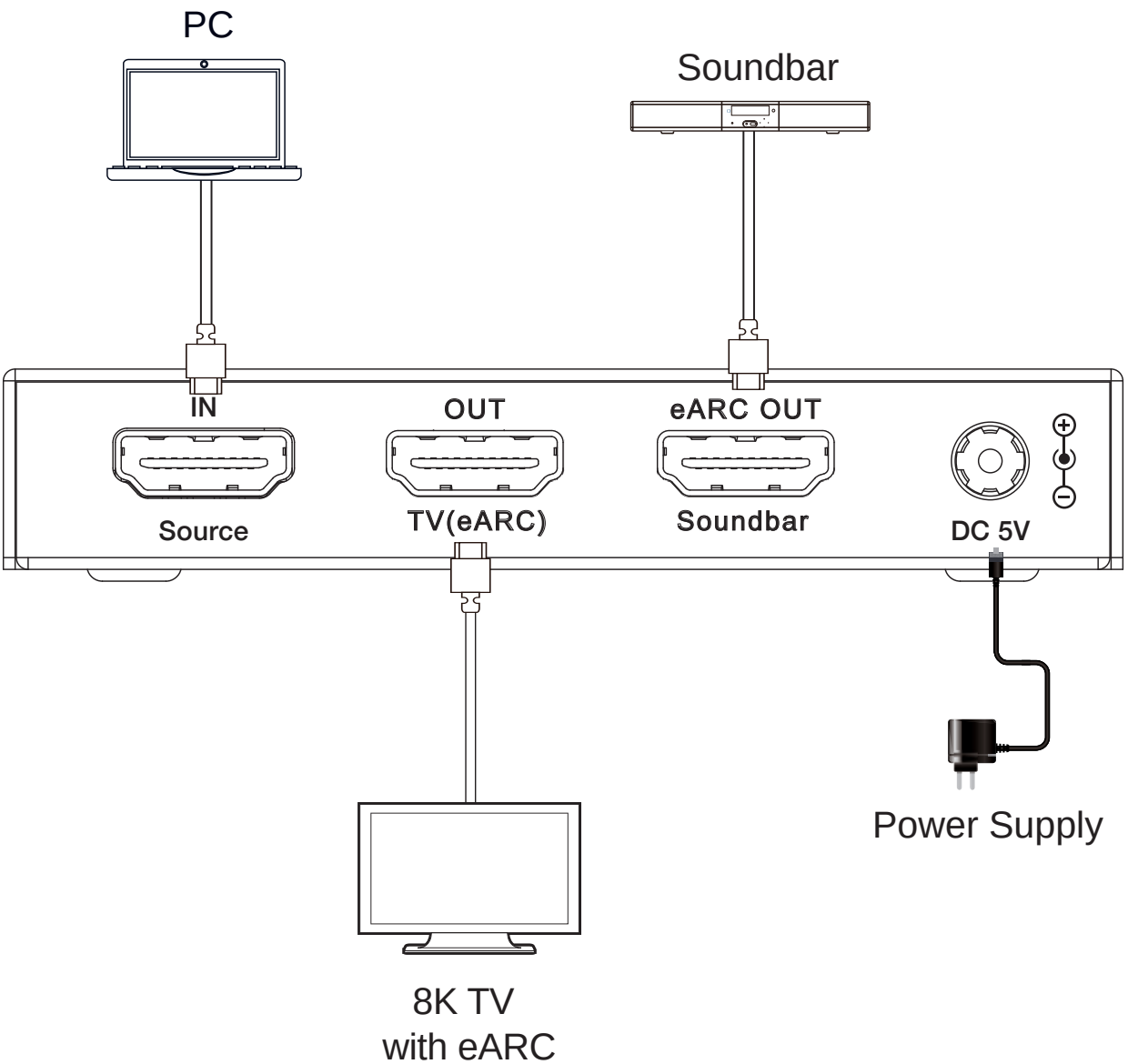


**Note:** When eARC function is turned on, the audio signal of Soundbar is the audio returned from 8K TV. When eARC function is turned off, the audio signal of Amplifier is from the HDMI input source.

HDMI™
HIGH-DEFINITION MULTIMEDIA INTERFACE

The terms HDMI and HDMI High-Definition Multimedia interface, and the HDMI Logo are trademarks or registered trademarks of HDMI Licensing LLC in the United States and other countries.