Lideo

Lideo SP-8K14

48Gbps 1x4 Splitter

USER MANUAL

Thank you for purchasing this product

For optimum performance and safety, please read these instructions carefully before connecting, operating or adjusting this product. Please keep this manual for future reference.

Surge protection device recommended

This product contains sensitive electrical components that may be damaged by electrical spikes, surges, electric shock, lighting strikes, etc. Use of surge protection systems is highly recommended in order to protect and extend the life of your equipment.

Table of Contents

1. Introduction.....1

2. Features.....1

3. Package Contents.....1

4. Specifications.....2

5. Operation Controls and Functions.....3

6. Auto Downscaling & Auto Converting.....4

7. Application Example.....6

1. Introduction

This 1x4 splitter is an advanced solution for splitting single HDMI signal to 4 HDMI outputs synchronously, with video resolution up to 8K@60 4:2:0 12bit. It supports data rates up to 48Gbps to comply with HDMI 2.1 and HDCP 2.3 requirements. It includes several features for ease of integration, including EDID management, cable equalization.
This multi-functional product can work well with xbox or PS5 to achieve 4K@120Hz on your TVs or relative monitors.

2. Features

☆ HDCP 2.3 compliant
☆ Support 48Gbps FRL and 18Gbps TMDS video bandwidth
☆ Support video resolution up to 8K@60Hz 4:2:0 12bit, 4K@120Hz 4:4:4 12bit, as specified in HDMI 2.1
☆ HDMI 2.1 protocols: VRR, ALLM, QMS, QFT, SBTM are supported
☆ Support HDR, HDR 10, HDR 10+, Dolby Vision, HLG pass-through
☆ LPCM 7.1CH, Dolby TrueHD, Atmos and DTS-HD Master, DTS:X Audio pass-through
☆ 8K to 4K or 8K/4K to 1080P auto downscaling on all outputs
☆ HDR to SDR auto converting on all outputs
☆ Advanced EDID management
☆ Compact design for easy and flexible installation

3. Package Contents

① 1 × 48Gbps 1x4 Splitter
② 1 × 5V/2A Multinational Power Supply
③ 1 × User Manual

4. Specifications

Technical	
HDMI Compliance	HDMI 2.1
HDCP Compliance	HDCP 2.3
Video Bandwidth	48Gbps
Video Resolution	Up to 8K@60Hz 4:2:0 12bit, 4K@120Hz 4:4:4 12bit
Color Depth	8/10/12-bit
Color Space	RGB, YCbCr_4:4:4, YCbCr_4:2:2, YCbCr_4:2:0
Audio Formats	**HDMI input/output:** LPCM, Dolby Digital/Plus/EX, Dolby True HD, Dolby Atmos, DTS, DTS-EX, DTS-96/24, DTS High Res, DTS-HD Master Audio, DSD
HDR	HDR, HDR10, HDR10+, Dolby Vision, HLG
ESD Protection	IEC 61000-4-2: ±8kV (Air-gap discharge) & ±4kV (Contact discharge)
Connection	
Input	1 × HDMI IN [Type A, 19-pin female]
Output	4 × HDMI OUT [Type A, 19-pin female]
Control	1 × SERVICE [USB Type C, Update port]
Mechanical	
Housing	Metal Enclosure
Color	Black
Dimensions	145mm [W] × 68mm [D] × 17mm [H]
Weight	263g
Power Supply	Input: AC 100-240V 50/60Hz, Output: DC 5V/2A (US/EU standards, CE/FCC/UL certified)
Power Consumption	5.5W (Max)
Operation Temperature	0°C ~ 40°C / 32°F ~ 104°F
Storage Temperature	-20°C ~ 60°C / -4°F ~ 140°F
Relative Humidity	20~90% RH (non-condensing)

Recommended HDMI Cable				
Video Resolution	8K	4K60	4K24	1080P
HDMI Cable Length (HDMI IN / OUT)	3m/10ft (Ultra HDMI 2.1)	8m/26ft	12m/39ft	15m/49ft
The use of “Premium High Speed HDMI” cable is highly recommended.				

5. Operation Controls and Functions

Front Panel

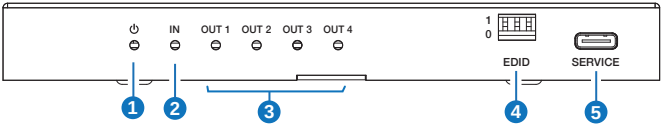

Rear Panel

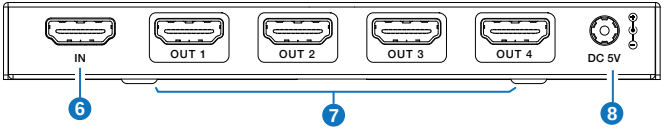

No.	Name	Function Description
1	Power LED	When the device is powered on, the red LED will be on.
2	IN LED	When the HDMI IN port connects to an active source device, the green LED will be on.
3	OUT LED (1~4)	When the HDMI OUT 1/2/3/4 port connects to a display device and outputs signal, the corresponding green LED will be on.

No.	Name	Function Description
4	EDID DIP switch	Use the DIP switch to set EDID. [DIP]=111: Copy OUT 1 port sink EDID (as factory default) [DIP]=110: 4K60 (4:4:4), 2.0CH [DIP]=101: FRL12G_8K_HDR, 2.0CH [DIP]=100: FRL12G_8K_HDR, 5.1CH [DIP]=011: FRL12G_8K_HDR, 7.1CH [DIP]=010: FRL10G_8K_HDR, 2.0CH [DIP]=001: FRL10G_8K_HDR, 5.1CH [DIP]=000: FRL10G_8K_HDR, 7.1CH
5	SERVICE	Firmware update port.
6	IN port	HDMI signal input port, connected to HDMI source device such as DVD or PS5 with an HDMI cable.
7	OUT port (1~4)	HDMI signal output port, connected to HDMI display device such as TV or Monitor with an HDMI cable.
8	DC 5V	DC 5V/2A power input port.

6. Auto Downscaling & Auto Converting

This 1x4 splitter supports independent auto downscaling and auto converting on all outputs. It will automatically output the correct HDMI signal according to the EDID of the display device.

Before downscaling it will compare all the EDID of the connected display devices and select the minimum resolution to downscale and output. For example:

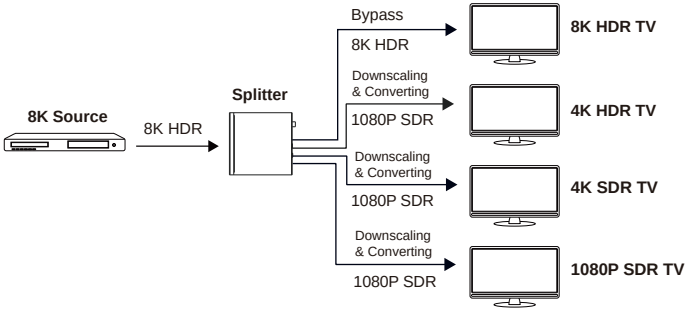

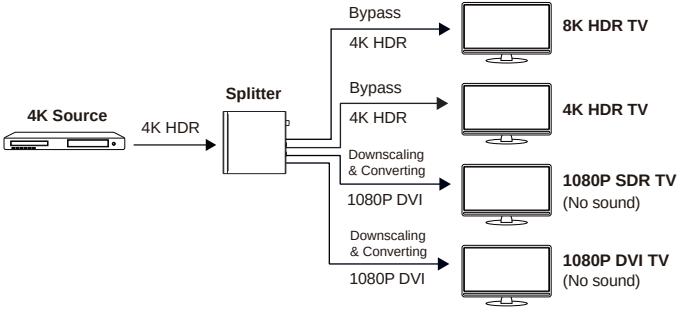

Note: *If the source resolution is downscaled and converted to* ***1080P DVI*** *according to the EDID of display devices, it will be output without sound on TV.*

Downscaling will not work in the following conditions:

1. The input source is 8K DSC format.
2. The resolution of input source is not supported by the splitter.

7. Application Example

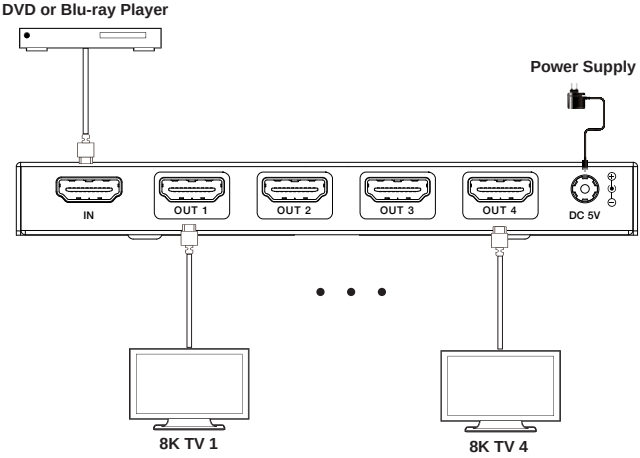

The terms HDMI and HDMI High-Definition Multimedia interface, and the HDMI Logo are trademarks or registered trademarks of HDMI Licensing LLC in the United States and other countries.