USB2.0 HD Video Camera
User Manual

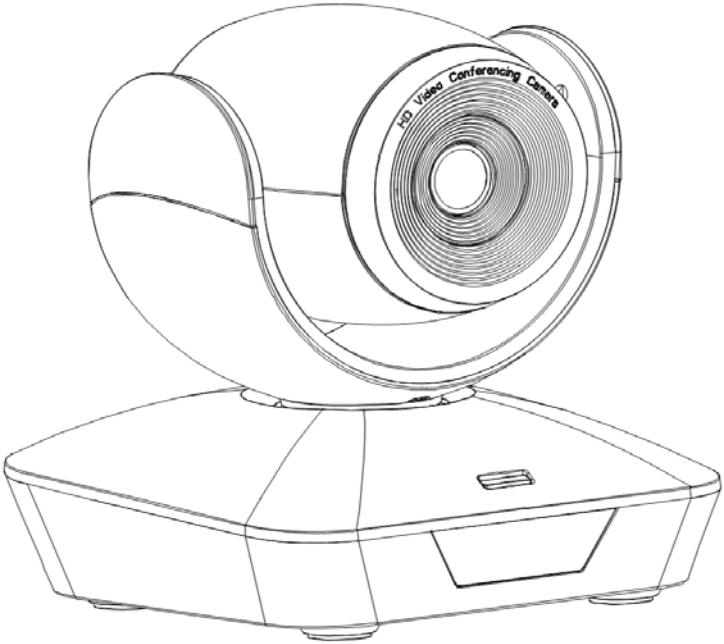

Version V1.0

（English）

CONTENTS

CONTENTS 2

SAFE GUIDES 3

ACCESSORIES 5

QUICK START 5

PRODUCT LIGHLIGHTS 6

PRODUCT SPEC 6

CAMERA INTERFACE 7

CAMERA DIMENSION 7

IR REMOTE 8

LEARNING FUNCTION 9

VISCA IN(RS232) PORT 9

SERIAL CONFIGURATION 10

VISCA PROTOCOL 11

PELCO-D PROTOCOL 17

PELCO-P PROTOCOL 18

OSD MENU 19

IR TRANSFER(IR PASS) 22

UVC CONTROL 22

SAFETY GUIDES

1.Beforeoperation, please fully read and follow all instructions in the manual. For your safety, always keep this manual with the camera.

2.The camera power input range is 100-240VAC(50-60Hz),ensure the power supply input within this rate before powering on.

3.The camera power voltage is 12VDC, rated currency is 1.5A. We suggest you use it with the original power supply adapter supplied by the factory.

4.Pleasekeep the power cable, video cable and control cable in a safe place. Protect all cables especiallythe connectors.

5.Operational environment: 0℃-50℃, humidity less than 90% .To avoid any danger, do not putanything inside the camera, and keep away from the corrosive liquid.

6.Avoid stress, vibration and damp during transportation, storage and installation.

7.Do not detetch the camera housing and cover. For any service, please contact authorized technicians.

8.RF cable and control cable should be individually shielded, and cannot be substituted with other cables. Do not direct the camera lens towards strong light, such as the sun or the intensive light.

9.Use a dry and soft cloth to clean the camera housing. Applied with neutral cleaning agent when there is need to clean. To avoid damage on the camera lens, never use strong or abrasive cleaning agents on the camera housing.

10.Do not move the camera by holding the camera head. To avoid mechanical trouble, do not rotate the camera head by hand.

11.Put the camera on fixed and smooth desk or platform, avoid leaned installation.

12. Power Supply Polarity(Drawing)

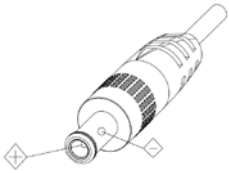

Notice:

The camera video may be affected when the electromagnetic fields is at specific frequency.

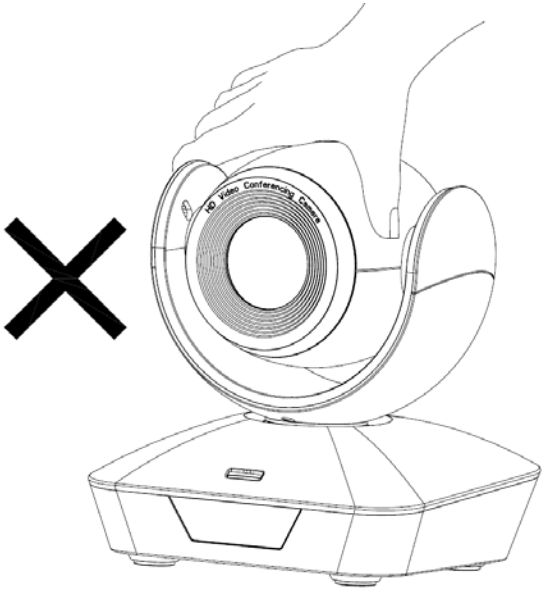

⚠DO NOT use hands to take the camera head, otherwise it may damage the camera rotation structure.

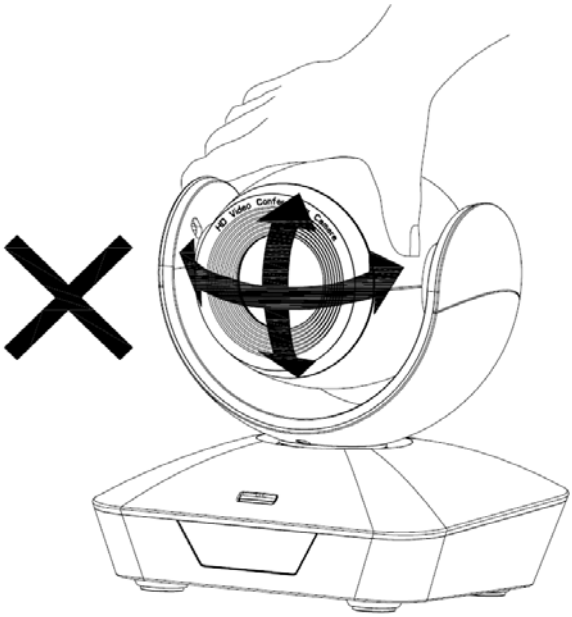

⚠ DO NOT use hands to move the camera head, otherwise it may damage the rotation structure or even broke the driving motor.

ACCESSORIES

Check all bellow items when open the package:
Camera ····· 1
Power Adapter ····· 1
Power Cable ····· 1
RS232 Control Cable····· 1
USB2.0 Cable…… 1
Remote Controller ····· 1
User Manual ····· 1
Double-sided Adhesive…….. 1
Quality Certificate……1

QUICK START

1. 1.Check all cable connections before power on.

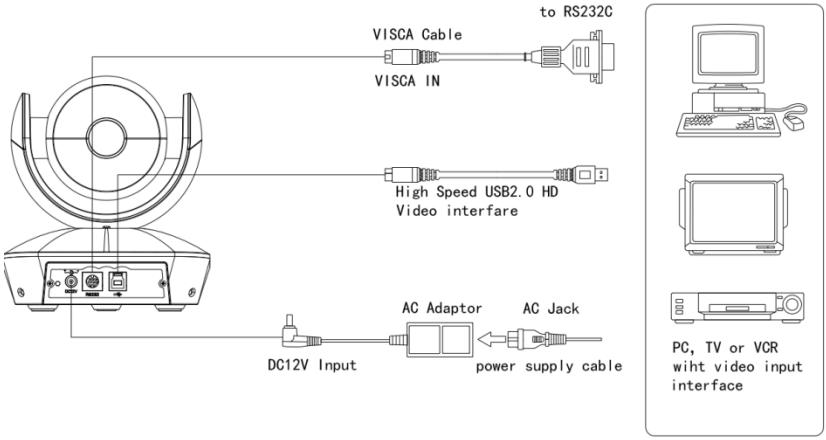

2. DIP Switch Setting (at the bottom of the camera):

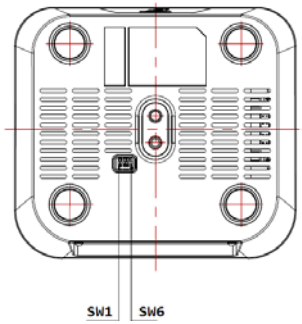

Function（ARM）			
	SW-1	SW-2	Instruction
1	OFF	/	Updating mode
2	ON	OFF	Debugging mode
3	ON	ON	Working mode

Function（USB）			
	SW-5	SW-6	Instruction
1	OFF	OFF	Working mode
2	ON	OFF	Updating mode
3	OFF	ON	Undefined
4	ON	ON	Undefined

PRODUCT HIGHLIGHTS

- Adopts advanced DSP，1/2.8 inch image sensor, and high quality wide angle lens
- Smart and fashion design, ideal for cloud-based conferencing
- Wide angle of viewing: 108degree, suitable for huddle room application
- Fast switching between different video formats: less than 1 second
- 3x optical zoom and 4xdigital zoom
- Fast and accurate focus performance
- USB2.0 high speed output
- Effective RS232/485 serial control
- Up to 128 presets
- Compatible with the majority of videoconferencing software (UVC1.5 protocol standard)
- With powerful functional remote controller
- IR transfer/IR pass function: except receiving the camera remote controller signal, the camera can also receive other codec's IR remote control signal, and pass these IR control signal to the codec's IR receiver (via VISCA IN port).
- OSD Menu: Chinese, English

PRODUCT SPEC

Video Format	MJPG/YUY2/H.264/H.265	1920x1080, 1600x896, 1280x1024, 1280x720, 1280x960, 1024x768, 1024x576, 960x540, 848x480, 800x600, 800x448, 720x576, 704x576, 640x480, 640x360, 480x272, 424x240, 352x288, 320x240, 320x180, 176x144, 160x120
Frame Rate	30/25/20/15/10/5fps	
Video Port	USB2.0	
Image Sensor	1/2.8 inch high quality, CMOS sensor	
Lens	F=1.7~3.0mm, angle of viewing: 108°	
Zoom	3x optical zoom and 4xdigital zoom	
Pan Tilt Angle	Pan:±170°; Tilt: -30°~+90°;	
Pan Tilt Speed	Pan: 6.7°- 45°/s; Tilt: 6.7°-45°/s	
Preset	10 via remote; 128 via RS232; Preset Accuracy0.2°	
Control Port	RS232 , USB2.0	
Minimum Lux	0.1 Lux	
White Balance	Auto/Manual/Manual 2/Tracking/ One Push/ Indoor/Outdoor/ Sodium/Fluorescent	
Focus Distance	Wide: 3.35±5%; Tele:10.05±5%mm	
Iris	Auto/Manual	
Electronic Shutter	Auto/Manual	
BLC	Auto/Manual	
WDR	Support	
Anti-Flicker	OFF/50Hz/60Hz	
Gamma	Support	
Up-Side Down	Support	
Mirror Image	Support	
3DNR	Support	
Input Voltage	DC12V 1A	
Size	148mm×132mm×161mm	
Net Weight	0.9KGS（2LBS）	

CAMERA INTERFACE

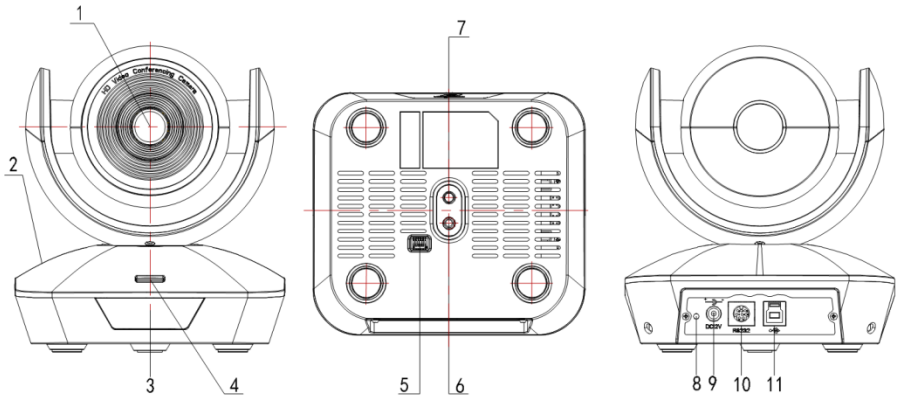

1.Camera Lens5.Dial Switch

2.Camera Base

3. IR Receive Panel

4.Indicator Light

9. 12VDC Power Input

6.Tripod Screw Hole

7.Installation Hole

8.Power Indicator Light(Red)

10. RS232Control Port(Input)

11.USB2.0 Port

CAMERA DIMENSION(MM)

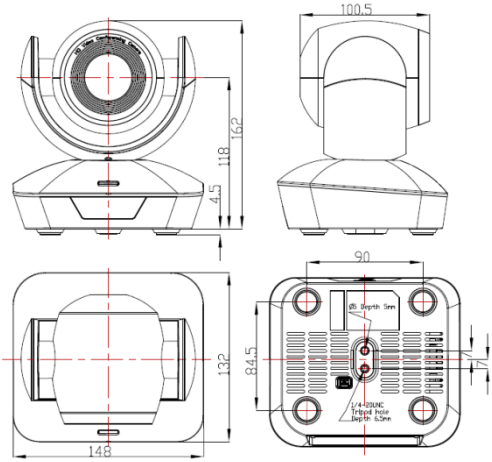

IR REMOTE CONTROLLER

LED Function Instruction

Press any button and shows in red color: Current selection is to control the camera;
Press any button and shows in green color: Current selection is to control the codec;
Press any button and shows in blue color: Current selection is to control the TV;

Power button

Red button: in normal work mode, short press one time, camera will enter standby mode; short press again, the camera will start self-configuration and go to HOME position; it will go to No.0 preset position if that was set;
Green button: Codec power button(need to learn the button coding);
Blue button: TV power button(need to learn the button coding);

Focus (Left): +/-
Manual focus, only valid under manual focus model;
Zoom (Right): +/-
Control the lens zoom rate;
Navigate : Up/Down/Left/Right
In normal working mode, use navigate key to control pan/tilt;
Confirm/Home button:
In normal working mode, short press to let the camera go back to Home position.

Menu button: show the camera version

Number buttons
Set Preset: Long press(3seconds) the number button to save preset;
Clear Preset: Clear+number button to clear the relative preset;
Long press(3seconds) the Clear button to clear all preset;

Run Preset: Short press the number button to run the relative preset.

LEARNING FUNCTION：

1. Press the green button, the LED indicator light will show in green color for 1 second, means switch to video terminal/codec control mode;
2.

2.**Single Button Coding:** long press(3seconds) Home +number"1" button simultaneously, the green indicator LED will light, enter button learning mode, press the buttons which need to be learned, LED will start flickering(1HZ), now can start button learning: get the codec remote point to the camera remote's infrared tube(about 10cm distance), then press the button which need to be learned, the LED re-flickering when learning finishes ; press other buttons which also need to be learned; Press the Home+"0" buttons simultaneously to exit and save all remote data.
If the button learning fails, the camera will enter normal working mode after 15seconds, LED will extinguish.

3. **All Button Coding:** long press (3seconds) Home+number"2" button simultaneously, the green indicator LED will start flickering(1HZ), to enter all button learning mode: get codec remote point to the camera remote's infrared tube(about 10cm distance), to start all button coding mode, the LED will extinguish when learning finished.
If the button learning fails, the camera will enter normal working mode after 15seconds, LED will extinguish.

4.**All Button Sending Mode:** long press (3seconds) the Menu+ number "3" button simultaneously, the remote will enter all button sending mode.

5. Similar operation for the TV control mode learning.

VISCA IN (RS232) PORT

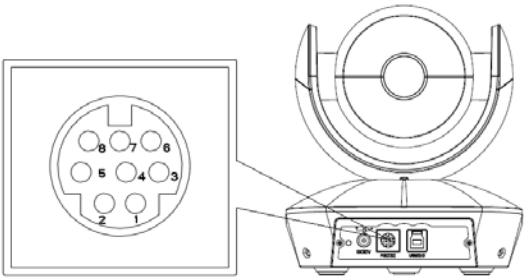

No.	Function
1	DTR
2	DSR
3	TXD
4	GND
5	RXD
6	A
7	IR OUT
8	B

VISCA IN &RS485 Connection

Camera VISCA IN		RS485
1	DTR	
2	DSR	
3	TXD	
4	GND	GND
5	RXD	
6	A(+)	A(+)
7	IR OUT	
8	B(-)	B(-)

VISCA IN &DB9 Connection

Camera VISCA IN		Windows DB-9	
1	DTR	6	DSR
2	DSR	4	DTR
3	TXD	2	RXD
4	GND	5	GND
5	RXD	3	TXD
6	A(+)		
7	IR OUT		
8	B(-)		

SERIAL PORT CONFIGURATION:

Parameter	Value	Parameter	Value
Baud rate	2400/4800/9600/115200	Stop Bit	1bit
Start Bit	1 bit	Verify Bit	None
Date Bit	8 bit		

VISCA PROTOCOL

Part1 Camera Return Command

Ack/Completion Message		
	Command Packet	**Note**
ACK	z0 41 FF	Returned when the command is accepted.
Completion	z0 51 FF	Returned when the command has been executed.

z = camera adderss+8

Error Messages		
	Command Packet	**Note**
Syntax Error	z0 60 02 FF	Returned when the command format is different or when a command with illegal command parameters is accepted
Command Not Executable	z0 61 41 FF	Returned when a command cannot be executed due to current conditions. For example, when commands controlling the focus manually are received during auto focus.

Part2 Camera Control Command

Command	Funnation	Command Packet	Note
AddressSet	Broadcast	88 30 01 FF	Address setting
IF_Clear	Broadcast	88 01 00 01 FF	I/F Clear
CAM_Power	On	8x 01 04 00 02 FF	Power ON/OFF
	Off	8x 01 04 00 03 FF	
CAM_Zoom	Stop	8x 01 04 07 00 FF	
	Tele(Standard)	8x 01 04 07 02 FF	
	Wide(Standard)	8x 01 04 07 03 FF	
	Tele(Variable)	8x 01 04 07 2p FF	p = 0(low)~7(high)
	Wide(Variable)	8x 01 04 07 3p FF	
	Direct	8x 01 04 47 0p 0q 0r 0s FF	pqrs: Zoom Position (0(wide) ~0x4000(tele))
	One Push AF	8x 01 04 18 01 FF	
CAM_WB	Auto	8x 01 04 35 00 FF	
	Indoor	8x 01 04 35 01 FF	
	Outdoor	8x 01 04 35 02 FF	
	OnePush	8x 01 04 35 03 FF	

Command	Funnation	Command Packet	Note
	ATW	8x 01 04 35 04FF	
	Manual	8x 01 04 35 05 FF	
	Sodium Lamp	8x 01 04 35 08 FF	
	Fluorescent lamp	8x 01 04 35 09 FF	
CAM_RGain	Reset	8x 01 04 03 00 FF	Manual Control of R Gain
	Up	8x 01 04 03 02 FF	
	Down	8x 01 04 03 03 FF	
	Direct	8x 01 04 43 00 00 0p 0q FF	pq: R Gain (0~0xFF)
CAM_Bgain	Reset	8x 01 04 04 00 FF	Manual Control of B Gain
	Up	8x 01 04 04 02 FF	
	Down	8x 01 04 04 03 FF	
	Direct	8x 01 04 44 00 00 0p 0q FF	pq: B Gain (0-0xFF)
CAM_AE	Full Auto	8x 01 04 39 00 FF	Automatic Exposure mode
	Manual	8x 01 04 39 03 FF	Manual Control mode
	Shutter Priority	8x 01 04 39 0A FF	Shutter Priority mode
	Iris Priority	8x 01 04 39 0B FF	Iris Priority mode
	Bright	8x 01 04 39 0D FF	Bright mode(Manual control)
CAM_Shutter	Reset	8x 01 04 0A 00 FF	Shutter Setting
	Up	8x 01 04 0A 02 FF	
	Down	8x 01 04 0A 03 FF	
	Direct	8x 01 04 4A 00 00 0p 0q FF	pq: Shutter Position (0~0x15)
CAM_Gain	Reset	8x 01 040C 00 FF	Gain Setting
	Up	8x 01 04 0C 02 FF	
	Down	8x 01 04 0C 03 FF	
	Direct	8x 01 04 0C 00 00 0p 0q FF	pq: Gain Positon (0~0x0E)
CAM_Bright	Reset	8x 01 04 0D 00 FF	Bright Setting
	Up	8x 01 04 0D 02 FF	
	Down	8x 01 04 0D 03 FF	
	Direct	8x 01 04 4D 00 00 0p 0q FF	pq: Bright l Positon ()
CAM_WDR	On	8x 01 04 3D 02 FF	WDR ON/OFF
	Off	8x 01 04 3D 03 FF	
	Direct	8x 01 04 D3 0pFF	pq: WDR Position (1~0x06)
CAM_BackLight	On	8x 01 04 33 02 FF	BackLight On
	Off	8x 01 04 33 03 FF	BackLight Off

Command	Funnation	Command Packet	Note
CAM_Sharpness	Reset	8x 01 04 02 00 FF	Sharpness Control
	Up	8x 01 04 02 02 FF	
	Down	8x 01 04 02 03 FF	
	Direct	8x 01 04 42 00 00 0p 0q FF	pq: Aperture Gain (0~0x04)
CAM_Preset	Reset	8x 01 04 3F 00 pp FF	pp: Preset Number(=0 to 127) Corresponds to 0 to 9 on the Remote Commander
	Set	8x 01 04 3F 01 pp FF	
	Recall	8x 01 04 3F 02 pp FF	
CAM_LR_Reverse	On	8x 01 04 61 02 FF	Image Flip Horizontal ON/OFF
	Off	8x 01 04 61 03 FF	
CAM_PictureFlip	On	8x 01 04 66 02 FF	Image Flip Vertical ON/OFF
	Off	8x 01 04 66 03 FF	
CAM_MountMode	UP	8x 01 04 A4 02 FF	Mount Up
	Down	8x 01 04 A4 03 FF	Mount Down
CAM_ColorGain	Direct	8x 01 04 49 00 00 00 0p FF	(0~0x0E)
CAM_Saturation	Direct	8x 01 04 A1 00 00 00 0p FF	(0~0x0E)
CAM_2D Noise Reduction	Direct	8x 01 04 53 0p FF	(0~0x05)
CAM_3D Noise Reduction	Direct	8x 01 04 54 0p FF	(0~0x03)
CAM_NewBright	Direct	81 01 04 A4 00 00 0p 0q FF	(0~0x0F)
CAM_Constrast	Direct	81 01 04 A2 00 00 0p 0q FF	(0~0x0F)
CAM_Gamma	Direct	8x 01 04 5B 0p FF	(0~0x04)
FLICK	Off	81 01 04 23 00 FF	
	50HZ	81 01 04 23 01 FF	
	60HZ	81 01 04 23 02 FF	
SYS_Menu	Menu On/Off	8x 01 04 7F 02 FF	Turn on/off the menu
	Menu Up	8x 01 04 07 02 FF	Menu up
	Menu Down	8x 01 04 07 03 FF	Menu down
	Menu Left	8x 01 04 08 02 FF	Menu left
	Menu Right	8x 01 04 08 03 FF	Menu right
IR_Transfer	Transfer On	8x 01 06 1A 02 FF	Receive IR(remote commander) CODE from VISCA communication ON/OFF
	Transfer Off	8x 01 06 1A 03 FF	
IR_Receive	On	8x 01 06 08 02 FF	IR(remote commander)receive ON/OFF
	Off	8x 01 06 08 03 FF	
	On/Off	8x 01 06 08 10 FF	
IR_ReceiveReturn	On	8x 01 7D 01 03 00 00 FF	IR(remote commander)receive

Command	Funnation	Command Packet	Note
	Off	8x 01 7D 01 13 00 00 FF	message via the VISCA communication ON/OFF
Pan_tiltDrive	Up	8x 01 06 01 VV WW 03 01 FF	VV: Pan speed 0x01 (low speed) to 0x18 (high speed) WW: Tilt speed 0x01 (low speed) to 0x14 (high speed) YYYY: Pan Position(TBD) ZZZZ: Tilt Position(TBD)
	Down	8x 01 06 01 VV WW 03 02 FF	
	Left	8x 01 06 01 VV WW 01 03 FF	
	Right	8x 01 06 01 VV WW 02 03 FF	
	Upleft	8x 01 06 01 VV WW 01 01 FF	
	Upright	8x 01 06 01 VV WW 02 01 FF	
	DownLeft	8x 01 06 01 VV WW 01 02 FF	
	DownRight	8x 01 06 01 VV WW 02 02 FF	
	Stop	8x 01 06 01 VV WW 03 03 FF	
	AbsolutePosition	8x 01 06 02 VV WW 0Y 0Y0Y0Y 0Z 0Z0Z0Z FF	
	RelativePosition	8x 01 06 03 VV WW 0Y 0Y0Y0Y 0Z 0Z0Z0Z FF	
	Home	8x 01 06 04 FF	
	Reset	8x 01 06 05 FF	
Pan-tiltLimitSet	Set	8x 01 06 07000W 0Y 0Y0Y0Y 0Z 0Z0Z0Z FF	W:1 UpRight 0:DownLeft YYYY: Pan Limit Position(TBD) ZZZZ: Tilt Limit Position(TBD)
	Clear	8x 01 06 07010W 07 0F0F0F 07 0F0F0F FF	

Part3 Inquiry Command

Command	Command Packet	Return Packet	Note
CAM_PowerInq	8x 09 04 00 FF	y0 50 02 FF	On
		y0 50 03 FF	Off(Standby)
CAM_ZoomPosInq	8x 09 04 47 FF	y0 50 0p 0q 0r 0s FF	pqrs: Zoom Position
CAM_WBModeInq	8x 09 04 35 FF	y0 50 00 FF	Auto
		y0 50 01 FF	Indoor mode
		y0 50 02 FF	Outdoor mode
		y0 50 03 FF	OnePush mode
		y0 50 04 FF	ATW
		y0 50 05 FF	Manual
CAM_RGainInq	8x 09 04 43 FF	y0 50 00 00 0p 0q FF	pq: R Gain
CAM_BGainInq	8x 09 04 44 FF	y0 50 00 00 0p 0q FF	pq: B Gain
CAM_AEModeInq	8x 09 04 39 FF	y0 50 00 FF	Full Auto
		y0 50 03 FF	Manual
		y0 50 0A FF	Shutter priority
		y0 50 0B FF	Iris priority
		y0 50 0D FF	Bright
CAM_ShutterPosInq	8x 09 04 4A FF	y0 50 00 00 0p 0q FF	pq: Shutter Position
CAM_GainPosiInq	8x 09 04 4C FF	y0 50 00 00 0p 0q FF	pq: Gain Position
CAM_BrightPosiInq	8x 09 04 4D FF	y0 50 00 00 0p 0q FF	pq: Bright Position
CAM_ExpCompModeInq	8x 09 04 3E FF	y0 50 02 FF	On

		y0 50 03 FF	Off
CAM_ExpCompPosInq	8x 09 04 4E FF	y0 50 00 00 0p 0q FF	pq: ExpComp Position
CAM_ApertureInq	8x 09 04 42 FF	y0 50 00 00 0p 0q FF	pq: Aperture Gain
CAM_MemoryInq	8x 09 04 3F FF	y0 50pp FF	pp: Memory number last operated.
SYS_MenuModeInq	8x 09 06 06 FF	y0 50 02 FF	On
		y0 50 03 FF	Off
CAM_LR_ReverseInq	8x 09 04 61 FF	y0 50 02 FF	On
		y0 50 03 FF	Off
CAM_PictureFlipInq	8x 09 04 66 FF	y0 50 02 FF	On
		y0 50 03 FF	Off
CAM_VersionInq	8x 09 00 02 FF	y0 50 ab cd mnpqrstuvw FF	
IR_Transfer	8x 09 06 1A FF	y0 50 02 FF	On
		y0 50 03 FF	Off
IR_Receive	8x 09 06 08 FF	y0 50 02 FF	On
		y0 50 03 FF	Off
IR_ReceiveReturn		y0 07 7D 01 04 00 FF	Power ON/OFF
		y0 07 7D 01 04 07 FF	Zoom tele/wide
		y0 07 7D 01 04 38 FF	AF On/Off
		y0 07 7D 01 04 33 FF	CAM_Backlight
		y0 07 7D 01 04 3F FF	CAM_Memory
		y0 07 7D 01 06 01 FF	Pan_tiltDrive
Pan-tiltPosInq	8x 09 06 12 FF	y0 50 0w 0w0w0w 0z 0z0z0z FF	wwww: PanPositionzzzz: Tilt Position

Note:【x】 means the camera address ;【y】=【x + 8】.

VISCA PAN TILT ABSOLUTE POSITION VALUE:

Pan Angle	VISCA Value	Tilt Angle	VISCA Value
-170	0xF670	-30	0xFE50
-135	0xF868	0	0x0000
-90	0xFAF0	30	0x01B0
-45	0xFD78	60	0x0360
0	0x0000	90	0x510
45	0x0288		
90	0x0510		
135	0x0798		
170	0x0990		

EXPOSURE PARAMETER SHEET:

		60/30mode	50/25mode			
Shutter speed	15	1/10000	1/10000	Iris	0	close
	14	1/6000	1/6000		1	F14
	13	1/4000	1/3500		2	F11
	12	1/3000	1/2500		3	F9.6
	11	1/2000	1/1750		4	F8
	10	1/1500	1/1250		5	F6.8
	0F	1/1000	1/1000		6	F5.6
	0E	1/725	1/600		7	F4.8
	0D	1/500	1/425		8	F4
	0C	1/350	1/300		9	F3.4
	0B	1/250	1/215		10	F2.8
	0A	1/180	1/150		11	F2.4
	09	1/125	1/120		12	F2
	08	1/100	1/100		13	F1.8
	07	1/90	1/75			
	06	1/60	1/50			
	05	1/30	1/25			
	04	1/15	1/12			
	03	1/8	1/6			
	02	1/4	1/3			
	01	1/2	1/2			
	00	1/1	1/1			
Gain	0	0dB		Gain	8	16dB
	1	2dB			9	18dB
	2	4dB			10	20dB
	3	6dB			11	22dB
	4	8dB			12	24dB
	5	10dB			13	26dB
	6	12dB			14	28dB
	7	14dB			15	30dB

		IRIS	GAIN
	1B	F1.8	+28 dB
	1A	F1.8	+26 dB
	19	F1.8	+24 dB
	18	F1.8	+22 dB
	17	F1.8	+20 dB
	16	F1.8	+18 dB
	15	F1.8	+16 dB
	14	F1.8	+14 dB
	13	F1.8	+12 dB
	12	F1.8	+10 dB
	11	F1.8	+8 dB
	10	F1.8	+6 dB
	0F	F1.8	+4 dB
	0E	F1.8	+2 dB
Bright	0D	F1.8	0 dB
	0C	F2	0 dB
	0B	F2.4	0 dB
	0A	F2.8	0 dB
	09	F3.4	0 dB
	08	F4	0 dB
	07	F4.8	0 dB
	06	F5.6	0 dB
	05	F6.8	0 dB
	04	F8	0 dB
	03	F9.6	0 dB
	02	F11	0 dB
	01	F14	0 dB
	00	CLOSE	0 dB

PELCO-D PROTOCOL

Function	Byte1	Byte2	Byte3	Byte4	Byte5	Byte6	Byte7
Up	0xFF	Address	0x00	0x08	Pan Speed	Tilt Speed	SUM
Down	0xFF	Address	0x00	0x10	Pan Speed	Tilt Speed	SUM
Left	0xFF	Address	0x00	0x04	Pan Speed	Tilt Speed	SUM
Right	0xFF	Address	0x00	0x02	Pan Speed	Tilt Speed	SUM
Upleft	0xFF	Address	0x00	0x0C	Pan Speed	Tilt Speed	SUM
Upright	0xFF	Address	0x00	0x0A	Pan Speed	Tilt Speed	SUM
DownLeft	0xFF	Address	0x00	0x14	Pan Speed	Tilt Speed	SUM
DownRight	0xFF	Address	0x00	0x12	Pan Speed	Tilt Speed	SUM
Zoom In	0xFF	Address	0x00	0x20	0x00	0x00	SUM
Zoom Out	0xFF	Address	0x00	0x40	0x00	0x00	SUM
Set Preset	0xFF	Address	0x00	0x03	0x00	Preset ID	SUM
Clear Preset	0xFF	Address	0x00	0x05	0x00	Preset ID	SUM
Call Preset	0xFF	Address	0x00	0x07	0x00	Preset ID	SUM
Query Pan Position	0xFF	Address	0x00	0x51	0x00	0x00	SUM
Query Pan Position Response	0xFF	Address	0x00	0x59	Value High Byte	Value Low Byte	SUM
Query Tilt Position	0xFF	Address	0x00	0x53	0x00	0x00	SUM
Query Tilt Position Response	0xFF	Address	0x00	0x5B	Value High Byte	Value Low Byte	SUM
Query Zoom Position	0xFF	Address	0x00	0x55	0x00	0x00	SUM
Query Zoom Position Response	0xFF	Address	0x00	0x5D	Value High Byte	Value Low Byte	SUM

PELCO-P PROTOCOL

Function	Byte1	Byte2	Byte3	Byte4	Byte5	Byte6	Byte7	Byte8
Up	0xA0	Address	0x00	0x08	Pan Speed	Tilt Speed	0xAF	XOR
Down	0xA0	Address	0x00	0x10	Pan Speed	Tilt Speed	0xAF	XOR
Left	0xA0	Address	0x00	0x04	Pan Speed	Tilt Speed	0xAF	XOR
Right	0xA0	Address	0x00	0x02	Pan Speed	Tilt Speed	0xAF	XOR
Upleft	0xA0	Address	0x00	0x0C	Pan Speed	Tilt Speed	0xAF	XOR
Upright	0xA0	Address	0x00	0x0A	Pan Speed	Tilt Speed	0xAF	XOR
DownLeft	0xA0	Address	0x00	0x14	Pan Speed	Tilt Speed	0xAF	XOR
DownRight	0xA0	Address	0x00	0x12	Pan Speed	Tilt Speed	0xAF	XOR
Zoom In	0xA0	Address	0x00	0x20	0x00	0x00	0xAF	XOR
Zoom Out	0xA0	Address	0x00	0x40	0x00	0x00	0xAF	XOR
Set Preset	0xA0	Address	0x00	0x03	0x00	Preset ID	0xAF	XOR
Clear Preset	0xA0	Address	0x00	0x05	0x00	Preset ID	0xAF	XOR
Call Preset	0xA0	Address	0x00	0x07	0x00	Preset ID	0xAF	XOR
Query Pan Position	0xA0	Address	0x00	0x51	0x00	0x00	0xAF	XOR
Query Pan Position Response	0xA0	Address	0x00	0x59	Value High Byte	Value Low Byte	0xAF	XOR
Query Tilt Position	0xA0	Address	0x00	0x53	0x00	0x00	0xAF	XOR
Query Tilt Position Response	0xA0	Address	0x00	0x5B	Value High Byte	Value Low Byte	0xAF	XOR
Query Zoom Position	0xA0	Address	0x00	0x55	0x00	0x00	0xAF	XOR
Query Zoom Position Response	0xA0	Address	0x00	0x5D	Value High Byte	Value Low Byte	0xAF	XOR

OSD MENU

1. under working mode, press the menu button on the IR remote, to enter the OSD menu ; press the menu button again to exit and save modified parameters.

2. Use the navigate button to select the main menu. As above picture, once been selected, the main menu will change to grey color background, and the right side will show all parameters under this sub menu :；

3. In the second grade menu, press the up/down navigate button to select the sub menu, use left/right navigate button to set the parameter；

4.Select the last option “return” and press the right navigate button to get back to previous menu;

5. Press OSD button again to exit the menu.；

6.OSD Menu Layout:

SYSTEM	LANGUAGE	ENGLISH/CHINESE	
	PROTOCOL	VISCA,PELCO-P, PELCO-D	Defaulted: VISCA
	ADDRESS	VISCA:1~7 ;PELCO-P/D:0~255	Defaulted: 1
	BAUD RATE	2400, 4800, 9600, 19200, 38400, 57600, 115200	Defaulted: 9600
	RETURN	Back to the main menu	

EXPOSURE	EXP. MODE	AUTO, MANU, IRIS, SHUT, BRI.	Defaulted:AUTO
	SHUTTER	Shutter Speed: 1/30~1/10K (Only valid when EXP MODE set to MANU or SHUT mode)	Defaulted:1/100
	IRIS	Invalid for fixed lens	Defaulted:10
	GAIN	Gain value: 0dB~15dB (only valid when EXP MODE set to MANU mode)	Defaulted:0
	BRIGHT	Brightness value:0~27 (only valid when EXP MODE set to BRI. mode)	Defaulted:11
	FLICK	OFF/50Hz/60Hz	Defaulted:50Hz
	BACKLIGHT	ON/OFF	Defaulted: OFF
	GAMMA	0~63	Defaulted:30
	RETURN	Back to the main menu	

IMAGE	WB MODE	WHITE BALANCE mode: ATW, MANU, MANU2, SON.FL.AUTO,IDR., ODR.,PUSH	Defaulted:AUTO
	B-GAIN	BLUE GAIN level:0~255 (only valid when WB MODE set to MANU mode)	Defaulted:52
	R-GAIN	RED GAIN level:0~255 (only valid when WB MODE set to MANU mode)	Defaulted:58
	DEFOG	Set image transparency: OFF, 1~15, (suggest to set a lower value)	Defaulted: OFF
	RETURN	Back to the main menu	

QUALITY	2D NR	2D Noise Reduction: OFF/ON	Defaulted: OFF
	3D NR	3D Noise Reduction: OFF/AUTO, 1~4	Defaulted: AUTO
	SHARPNESS	Sharpness setting: 0~15; the higher value, the clearer of image shape	Defaulted: 4
	CONSTRAST	Contrast setting: 0~15	Defaulted: 9
	SATURATION	Saturation setting: 0~15	Defaulted:8
	BRIGHT	Brightness setting: 0~15	Defaulted:9
	D-WDR	OFF/1~6	Defaulted: OFF
	RETURN	Back to the main menu	

CTRL	MIRROR	Set Image Left/Right flip: ON/OFF	Defaulted: OFF
	FLIP	Set Image Up/Down: ON/OFF	Defaulted: OFF
	D/N MODE	Set Day/Night mode: DAY/NIGHT	Defaulted: DAY
	GAIN LIMIT	Set auto exposure gain limit	Defaulted: 128
	RETURN	Back to the main menu	

RESET	CAM RESET	Reset image to defaulted value
	PTZ RESET	Reset pan tilt zoom to defaulted value
	ALL RESET	Reset both camera and pan tilt zoom
	RETURN	Back to the main menu

INFO	CONTROL VE	Control firmware version
	CONTROL DA	Firmware release date
	FORMAT	Current video format
	BAUDRATE	Current baud rate
	RETURN	Back to the main menu

IR TRANSFER(IR PASS)

1 IR transfer(IR Pass) function available by setting the SW3 and SW4(at the bottom of the camera). Currently the camera support NEC code. For customized with other code, pls contact us for adding.

2. Once the camera power on and finish configuration:

if set to NEC code, can enable the IR transfer function via OSD menu or via serial command.

if set non NEC code, then can enable it only via VISCA IN port.

3. Put the targeted remote controller towards to the camera IR receiver, press keys on the remote controller, then the camera will output the received IR code via VISCA IN port.

4. IR Transfer output format: XX XXXXXX: Remote Controller CodeFF: End Code

UVC CONTROL

1. Only run the client software after the camera has completed self-configuration (the IR indicator in blue color and will not flash); otherwise may cause black video issue.

2. Make sure the camera is recognized by the PC Device Manager.

3. Make sure the interval of video format switching more than 1 second, otherwise black video maybe caused.

4. Make sure the interval of control command sending from the server (via USB) to the camera no less than 250ms.

5. Support standard UVC interface.

UVC Property	**Relevant VISCA Command**
PU_BACKLIGHT_COMPENSATION_CONTROL	8x 01 04 33 02 FF
CY_FX_UVC_PU_BRIGHTNESS_CONTROL	8x 01 04 A4 00 00 0p 0q FF
CY_FX_UVC_PU_CONTRAST_CONTROL	8x 01 04 A2 00 00 0p 0q FF
CY_FX_UVC_PU_SATURATION_CONTROL	8x 01 04 A1 00 00 0p 0q FF
CY_FX_UVC_PU_SHARPNESS_CONTROL	8x 01 04 42 00 00 0p 0q FF
CY_FX_UVC_PU_GAMMA_CONTROL	8x 01 04 5B 0p FF
CY_FX_UVC_PU_WHITE_BALANCE_TEMPERATURE_CONTROL	8x 01 04 35 0p FF
CY_FX_UVC_PU_BACKLIGHT_COMPENSATION_CONTROL	8x 01 04 33 0p FF
CY_FX_UVC_PU_GAIN_CONTROL	8x 01 04 49 00 00 0p 0q FF
CY_FX_UVC_PU_POWER_LINE_FREQUENCY_CONTROL	8x 01 04 AA 0p FF
PU_GAIN_CONTROL	8x 01 04 49 00 00 00 0p FF
CT_ZOOM_ABSOLUTE_CONTROL	8x 01 04 47 0p 0q 0r 0s FF
CT_PANTILT_ABSOLUTE_CONTROL	8x 01 06 02 VV WW 0Y 0Y0Y0Y 0Z 0Z0Z0Z F
CT_PANTILT_RELATIVE_CONTROL	8x 01 0601pp qqrrss FF
CT_ZOOM_RELATIVE_CONTROL	8x 01 04 07 pp FF