Lideo

Lideo SW41CA-8K

8K HDMI 4x1 Switcher

USER MANUAL

Thank you for purchasing this product

For optimum performance and safety, please read these instructions carefully before connecting, operating or adjusting this product. Please keep this manual for future reference.

Surge protection device recommended

This product contains sensitive electrical components that may be damaged by electrical spikes, surges, electric shock, lighting strikes, etc. Use of surge protection systems is highly recommended in order to protect and extend the life of your equipment.

Table of Contents

1. Introduction.....1
2. Features.....1
3. Package Contents.....1
4. Specifications.....2
5. Operation Controls and Functions.....3
6. IR Cable Pin Assignment.....5
7. IR Remote.....6
8. EDID Settings.....6
9. API Commands.....6
10. Application Example.....13

1. Introduction

This 8K 4x1 Switcher can switch any of the four 8K HDMI source signals to one 8K HDMI display. It supports video resolution up to 8K@60Hz 4:2:0 12bit. It features a 4-pin DIP switch for advanced EDID management. It supports digital and analog audio de-embedding function (analog audio output with gain control). It can be controlled via front panel buttons, IR remote and RS-232 API commands. The built-in HDMI signal generator function can quickly diagnose external device connections. This multi-functional product can be widely applied in scenarios of video conference, demonstration, multimedia teaching and other scenarios of requiring big-screen demonstration.

2. Features

☆ Video resolution up to 8K60 YCbCr 4:2:0 12bit, 8K30 RGB/YCbCr 4:4:4 12bit or 4K120 RGB/YCbCr 4:4:4 12bit, as specified in HDMI 2.1
☆ HDCP 2.3 compliant
☆ HDR, HDR10, HDR10+, Dolby Vision, ALLM/VRR pass-through
☆ HDMI audio formats pass-through: LPCM, Dolby Digital/Plus/EX, Dolby True HD, Dolby Atmos, DTS, DTS-EX, DTS-96/24, DTS High Res, DTS-HD Master Audio, DSD
☆ Digital and analog audio de-embedding (analog audio output with gain control)
☆ Auto or manual switching mode
☆ Built-in signal equalizer, retiming and driver
☆ Advanced EDID management
☆ Control via front panel buttons, IR remote and RS-232 API commands
☆ Compact design for easy and flexible installation

3. Package Contents

① 1x 8K HDMI 4x1 Switcher
② 1x IR Remote
③ 1x 5pin-3.5mm Phoenix Connector (male)
④ 1x 3pin-3.5mm Phoenix Connector (male)
⑤ 1x IR Wideband Receiver Cable (1.5m)
⑥ 2x Mounting Ear
⑦ 4x Machine Screw (KM3*4)
⑧ 1x 12V/1A Multinational Locking Power Supply
⑨ 1x User Manual

4. Specifications

Technical	
HDMI Compliance	HDMI 2.1
HDCP Compliance	HDCP 2.3
Video Bandwidth	48Gbps
Audio Latency	No Latency
Video Latency	No Latency
Video Resolution	Up to 8K60 YCbCr 4:2:0 12bit, 8K30 RGB/YCbCr 4:4:4 12bit or 4K120 RGB/YCbCr 4:4:4 12bit
Color Depth	8/10/12-bit
Color Space	RGB, YCbCr_4:4:4, YCbCr_4:2:2, YCbCr_4:2:0
HDR	HDR, HDR10, HDR10+, Dolby Vision, HLG
IR Level	12Vp-p
IR Frequency	Wideband 20K-60KHz
Audio Formats	**HDMI input/output:** LPCM, Dolby Digital/Plus/EX, Dolby True HD, Dolby Atmos, DTS, DTS-EX, DTS-96/24, DTS High Res, DTS-HD Master Audio, DSD **Audio de-embedding output:** Optical: Up to LPCM/Dolby/DTS 5.1CH Analog: Only LPCM 2CH
ESD Protection	IEC 61000-4-2: ±8kV (Air-gap discharge) & ±4kV (Contact discharge)
Connection	
Input	4x HDMI IN [Type A, 19-pin female]
Output	1x HDMI OUT [Type A, 19-pin female] 1x OPTICAL AUDIO OUT [S/PDIF, female] 1x L/R AUDIO OUT [5pin-3.5mm Phoenix connector]
Control	1x RS-232 [3pin-3.5mm Phoenix connector] 1x IR CTL [3.5mm stereo mini-jack] 1x SERVICE [USB Type C, Update port]

Mechanical	
Housing	Metal Enclosure
Silkscreen Color	Black
Dimensions	220mm [W] × 110mm [D] × 21.5mm [H]
Weight	595g
Power Supply	Input: AC100 - 240V 50/60Hz, Output: DC 12V/1A (US/EU standards, CE/FCC/UL certified)
Power Consumption	5.4W (Max)
Operation Temperature	-10°C ~ 45°C / 14°F ~ 113°F
Storage Temperature	-20°C ~ 60°C / -4°F ~ 140°F
Relative Humidity	20~90% RH (non-condensing)

Recommended HDMI Cable				
Video Resolution	8K	4K60	4K24	1080P
HDMI Cable Length (HDMI IN / OUT)	2m/6.6ft (Ultra HDMI 2.1)	8m/26ft	12m/39ft	15m/49ft
The use of “Premium High Speed HDMI” cable is highly recommended.				

5. Operation Controls and Functions

Front Panel

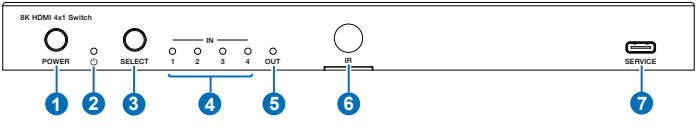

Rear Panel

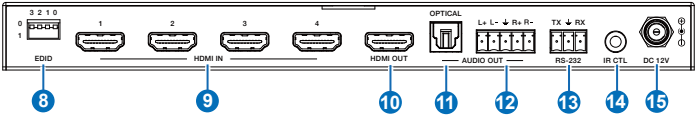

No.	Name	Function Description
1	POWER button	Press the POWER button to power on/off the device.
2	POWER LED	The power LED lights in green when the device is working, and red when the device is in standby.
3	SELECT button	Signal source selection button. Pressing this button will allow the device to switch any of the four HDMI input signals to the HDMI OUT port.
4	IN LED (1~4)	When the HDMI IN 1/2/3/4 port is selected as the signal source input channel, the corresponding green LED will be on.
5	OUT LED	When the HDMI OUT port connects a display device and outputs signal, the green LED will be on.
6	IR Window	IR input signal receiving window.
7	SERVICE	USB-C port for firmware update, software debugging and API commands controlling.
8	EDID DIP switch	Use the 4-pin DIP switch to set EDID information. 0000- EDID pass-through (Copy from Sink 1) (as factory default) 0001- HDMI 1080p@60Hz, Audio 2CH PCM 0010- HDMI 1080p@60Hz, Audio 5.1CH DTS/DOLBY 0011- HDMI 4K@60Hz 4:4:4, 8-bit, Audio 2CH PCM 0100- HDMI 4K@60Hz 4:4:4, 8-bit, Audio 5.1CH DTS/DOLBY 0101- HDMI 4K@120Hz 4:4:4, 10-bit HDR/DV, Audio 2CH PCM 0110- HDMI 4K@120Hz 4:4:4, 10-bit HDR/DV, Audio 5.1CH DTS/DOLBY 0111- HDMI 4K@120Hz 4:4:4, 12-bit HDR/DV, Audio 2CH PCM 1000- HDMI 4K@120Hz 4:4:4, 12-bit HDR/DV, Audio 5.1CH DTS/DOLBY 1001- HDMI 8K@60Hz 4:2:0, 10-bit HDR/DV, Audio 2CH PCM 1010- HDMI 8K@60Hz 4:2:0, 10-bit HDR/DV, Audio 5.1CH DTS/DOLBY 1011- HDMI 8K@60Hz 4:2:0, 12-bit HDR/DV, Audio 2CH PCM 1100- HDMI 8K@60Hz 4:2:0, 12-bit HDR/DV, Audio 5.1CH DTS/DOLBY 1101- HDMI 8K@60Hz 4:2:0, 12-bit HDR/DV, Audio 2CH PCM - Inc VRR/DSC 1110- HDMI 8K@60Hz 4:2:0, 12-bit HDR/DV, Audio 5.1CH DTS/DOLBY - Inc VRR/DSC 1111- EDID Software if possible or HDMI 1080p@60Hz, Audio 2CH PCM
9	HDMI IN port (1~4)	HDMI signal input ports, connected to HDMI source device such as DVD or PS5 with an HDMI cable.

No.	Name	Function Description
10	HDMI OUT port	HDMI signal output port, connected to HDMI display device such as TV or Monitor with an HDMI cable.
11	OPTICAL (AUDIO OUT)	Optical fiber audio output port.
12	L+L-R+R- (AUDIO OUT)	Analog audio output port, supporting balanced audio output (with a maximum support of 2Vrms) and unbalanced audio output (with a maximum support of 1Vrms). Balanced connection method: L+, L-, ⏚, R+, R- Unbalanced connection method: L+, ⏚, R+
13	RS-232	RS-232 serial port, used for API commands control.
14	IR CTL	12V IR signal receiving port.
15	DC 12V	DC 12V/1A power input port.

6. IR Cable Pin Assignment

The pin assignment of the IR Receiver cable is as below:

IR RECEIVER

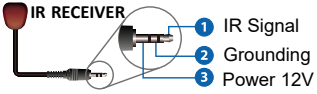

Note: When the angle between the IR receiver and the remote control is ± 45 °, the transmission distance is 0-5 meters; when the angle between the IR receiver and the remote control is ± 90 °, the transmission distance is 0-8 meters.

7. IR Remote

⏻ : Power on the product or set it to standby mode.

1/2/3/4 : Press 1/2/3/4 button to select HDMI signal source HDMI IN 1/2/3/4 to the HDMI OUT port.

: Press this button to cyclically switch HDMI signal source HDMI IN 1/2/3/4 to the HDMI OUT port.

8. EDID Settings

The switcher supports advanced EDID management. You can set the EDID information in two methods.
Method 1: Via EDID DIP switch
You can dial the EDID DIP switch to set EDID information. For details, please refer to the introduction of EDID DIP switch in “5. Operation Controls and Functions”.
Method 2: Via API commands
When the EDID DIP switch is dialed to “1111”, you can send API commands to set EDID information. For the details of API commands, please refer to “9. API Commands”.

9. API Commands

The switcher also supports API commands control. Connect the RS-232 port or the SERVICE port of the switcher to a PC. Then open a Serial Command tool on PC to send ASCII commands to control the switcher.
The ASCII command list about the switcher is shown as below.

ASCII Commands

1. Service port (USB-C virtual RS-232) communication protocol (Internal debug)
   Baud rate: 115200 (Fixed) Data bit: 8 Stop bit: 1 Parity bit: none
   The end mark of command is “<CR><LF>”
2. Phoenix RS-232 port communication protocol (Connect to control system)
   Baud rate: 4800~115200 (Configurable) Data bit: 8 Stop bit: 1 Parity bit: none
   The end mark of command is “<CR><LF>”

x, y, z are parameters. Error Code describe: E00 -> unknown command
E01 -> parameter out of range E02 -> get the error edid data

Command Code	Function Description	Example	Feedback	Factory Default
?	Get the list of all commands	?	list all commands	
help	Get the list of all commands	help!	list all commands	
get fw version	Get firmware version	get fw version	mcu boot:vx.xx.xx mcu app :vx.xx.xx	
set power on/off	Set device power on/off	set power on set power off	power on system initializing... initialization finished! fw version x.xx.xx power off	
get power	Get device power status	get power	power on /power off	
set reboot	Reboot the device	set reboot	reboot… system initializing... initialization finished! fw version x.xx.xx	
set reset	Reset to factory defaults	set reset	reset to factory defaults system initializing... initialization finished! fw version x.xx.xx	
get status	Get system status	get status	Please refer to the note at the end of the list.	
set IR on/off	Set IR on/off	set IR on set IR off	IR on IR off	on
get IR	Get IR on/off status	get IR	IR on /IR off	
set key on/off	Set front panel key on/off	set key on set key off	key on key off	on
get key	Get front panel key on/off status	get key	key on/off	
set baud x	Set RS-232 baud rate to x bps x=1: 4800 x=2: 9600 x=3: 19200 x=4: 38400 x=5: 57600 x=6: 115200	set baud 6	baud rate 115200	115200

Command Code	Function Description	Example	Feedback	Factory Default
get baud	Get RS-232 baud rate	get baud	baud rate 115200	
set input x	Set input video (x=0~4) x=0: Off x=1~4: HDMI input 1~4	set input 1	input HDMI 1	1
get input	Get input port	get input	input HDMI 1	
get hdmi5v	Get input HDMI 5V	get hdmi5v	HDMI 1: 5V HDMI 2: none HDMI 3: 5V HDMI 4: none	
set autoswitch x	Set auto-switching on/off (HDMI 5V detection) x=On, Off	set autoswitch on	autoswitch on autoswitch off	on
get autoswitch	Get auto-switching status	get autoswitch	autoswitch on/off	
set output display y	Set output display mode (y=0~3) y=0: Off (disable TMDS output) y=1: Input video y=2: AVMUTE y=3: Internal pattern	set output display 2	output display off (disable TMDS output) output display input video output display AVMUTE output display internal pattern	1
get output display	Get output display mode	get output display	output display off/input video/AVMUTE/internal pattern	
set output HDCP y	Set output HDCP mode (y=0~4) y=0: Reserved y=1: Follow sink y=2: Follow source y=3: Force HDCP 1.4 y=4: Force HDCP 2.2	set output HDCP 1	output HDCP follow sink output HDCP follow source output HDCP force HDCP 1.4 output HDCP force HDCP 2.2	1
get output HDCP	Get output HDCP mode	get output HDCP	output HDCP follow sink/follow source/ force HDCP 1.4/ force HDCP 2.2	
set analog mute x	Set analog audio mute on/off x=On, Off	set analog mute on	analog mute on analog mute off	off
get analog mute	Get analog audio mute status	get analog mute	analog mute on analog mute off	
set analog gain x	Set analog audio gain (x=0dB ~ -79dB)	set analog gain -79dB	analog gain -79dB	0dB
get analog gain	Get analog audio gain value	get analog gain	analog gain -79dB	

Command Code	Function Description	Example	Feedback	Factory Default
set generator x y	Set internal signal generator resolution (x=1~15) pattern (y=1~13) x=01: 8K30Hz x=02: 4K120Hz x=03: 4K100Hz x=04: 5K60Hz x=05: 5K50Hz x=06: 5K30Hz x=07: 5K25Hz x=08: 5K24Hz x=09: 4K60Hz x=10: 4K50Hz x=11: 4K25Hz x=12: 4K24Hz x=13: 1080P60Hz x=14: 480P60Hz x=15: 5760P50Hz y=01: Color bar y=02: Checkboard y=03: Strip y=04: Red y=05: Green y=06: Blue y=07: White y=08: Ramp y=09: Red ramp y=10: Green ramp y=11: Blue ramp y=12: PRBS y=13: Black	set generator 1 1	generator 8K30Hz color bar	
get generator	Get internal signal generator output resolution and pattern	get generator	generator 8K30Hz color bar	

Command Code	Function Description	Example	Feedback	Factory Default
set edid x to y	Set input ports (x=0~4) to EDID (y=0~32) x=0: all inputs x=1~4: HDMI input 1~4 y=00: HDMI 1080p@60Hz, Audio 2CH PCM (default) y=01: HDMI 1080p@60Hz, Audio 5.1CH DTS/DOLBY y=02: HDMI 1080p@60Hz, Audio 7.1CH DTS/DOLBY/HD y=03: HDMI 4K@60Hz 4:4:4, 8-bit, Audio 2CH PCM y=04: HDMI 4K@60Hz 4:4:4, 8-bit, Audio 5.1CH DTS/DOLBY y=05: HDMI 4K@60Hz 4:4:4, 8-bit, Audio 7.1CH DTS/ DOLBY/HD y=06: HDMI 4K@120Hz 4:4:4, 8-bit, Audio 2CH PCM y=07: HDMI 4K@120Hz 4:4:4, 8-bit, Audio 5.1CH DTS/DOLBY y=08: HDMI 4K@120Hz 4:4:4, 8-bit, Audio 7.1CH DTS/ DOLBY/HD y=09: HDMI 4K@120Hz 4:4:4, 10-bit HDR/DV, Audio 2CH PCM y=10: HDMI 4K@120Hz 4:4:4, 10-bit HDR/DV, Audio 5.1CH DTS/DOLBY y=11: HDMI 4K@120Hz 4:4:4, 10-bit HDR/DV, Audio 7.1CH DTS/DOLBY/HD y=12: HDMI 4K@120Hz 4:4:4, 12-bit HDR/DV, Audio 2CH PCM y=13: HDMI 4K@120Hz 4:4:4, 12-bit HDR/DV, Audio 5.1CH DTS/DOLBY y=14: HDMI 4K@120Hz 4:4:4, 12-bit HDR/DV, Audio 7.1CH DTS/DOLBY/HD y=15: HDMI 4K@120Hz 4:4:4, 12-bit HDR/DV, Audio 2CH PCM - Inc VRR/DSC y=16: HDMI 4K@120Hz 4:4:4, 12-bit HDR/DV, Audio 5.1CH DTS/DOLBY - Inc VRR/DSC y=17: HDMI 4K@120Hz 4:4:4, 12-bit HDR/DV, Audio 7.1CH DTS/DOLBY/HD - Inc VRR/DSC	set edid 0 to 0 set edid 1 to 1	all inputs EDID: HDMI 1080p@60Hz, Audio 2CH PCM (default) input 1 EDID: HDMI 1080p@60Hz, Audio 5.1CH DTS/DOLBY	HDMI 1080p@ 60Hz, Audio 2CH PCM

Command Code	Function Description	Example	Feedback	Factory Default
set edid x to y	y=18: HDMI 8K@60Hz 4:2:0, 10-bit HDR/DV, Audio 2CH PCM y=19: HDMI 8K@60Hz 4:2:0, 10-bit HDR/DV, Audio 5.1CH DTS/DOLBY y=20: HDMI 8K@60Hz 4:2:0, 10-bit HDR/DV, Audio 7.1CH DTS/DOLBY/HD y=21: HDMI 8K@60Hz 4:2:0, 12-bit HDR/DV, Audio 2CH PCM y=22: HDMI 8K@60Hz 4:2:0, 12-bit HDR/DV, Audio 5.1CH DTS/DOLBY y=23: HDMI 8K@60Hz 4:2:0, 12-bit HDR/DV, Audio 7.1CH DTS/DOLBY/HD y=24: HDMI 8K@60Hz 4:2:0, 12-bit HDR/DV, Audio 2CH PCM - Inc VRR/DSC y=25: HDMI 8K@60Hz 4:2:0, 12-bit HDR/DV, Audio 5.1CH DTS/DOLBY - Inc VRR/DSC y=26: HDMI 8K@60Hz 4:2:0, 12-bit HDR/DV, Audio 7.1CH DTS/DOLBY/HD - Inc VRR/DSC y=27: DVI 1920x1080@60Hz, Audio None y=28: DVI 1920x1200@60Hz, Audio None y=29: HDMI 1920x1200@60Hz, Audio 2CH PCM y=30: User EDID 1 y=31: User EDID 2 y=32: EDID pass-through (Copy from Sink 1)	set edid 0 to 0 set edid 1 to 1	all inputs EDID: HDMI 1080p@60Hz, Audio 2CH PCM (default) input 1 EDID: HDMI 1080p@60Hz, Audio 5.1CH DTS/DOLBY	HDMI 1080p@ 60Hz, Audio 2CH PCM
get edid x	Get input ports EDID x=0: all inputs x=1~4: HDMI input 1~4	get edid 0	input 1 EDID: HDMI 1080p@60Hz, Audio 2CH PCM (default) input 2 EDID: HDMI 1080p@60Hz, Audio 2CH PCM (default) input 3 EDID: HDMI 1080p@60Hz, Audio 2CH PCM (default) input 4 EDID: HDMI 1080p@60Hz, Audio 2CH PCM (default)	

Command Code	Function Description	Example	Feedback	Factory Default
get edid data x	Get input ports EDID data x=0: all inputs x=1~4: HDMI input 1~4	get edid data 0	HDMI input 1 EDID <00 FF FF FF….> HDMI input 2 EDID <00 FF FF FF….> HDMI input 3 EDID <00 FF FF FF….> HDMI input 4 EDID <00 FF FF FF….>	
set user edid x <y>	Set user defined EDID (x=1~2) x=1: User Defined 1 x=2: User Defined 2 y = 00 FF FF FF ….. (y is 256 bytes EDID data)	set user edid 1 <00 FF FF FF ….>	user defined 1 EDID is loaded successfully	
get user edid x	Get user defined EDID (x=1~2) x=1: User Defined 1 x=2: User Defined 2	get user edid 1	user defined 1 EDID <00 FF FF FF….>	

Note: The feedback of the command of "get status" is as following. (The middle line ends with <LF><CR> and the last line ends with <CR><LF>.)

```
==========================================================================================
Status Info 8K 4x1 Switcher
FW 1.0.0

Power    Key    IR    Baud      Autoswitch
On       On     On    115200    On

Input    Cable        EDID
01       Connected    DIP_0000:EDID pass-through
02       Connected    DIP_0000:EDID pass-through
03       Connected    DIP_0000:EDID pass-through
04       None         DIP_0000:EDID pass-through

Output   FromIn   Cable       Resolution        ColorSpace   ColorDepth   HDCP
01       01       Connected   3840x2160p60Hz    YUV 4:2:0    12bit        Sink

==========================================================================================
```

10. Application Example

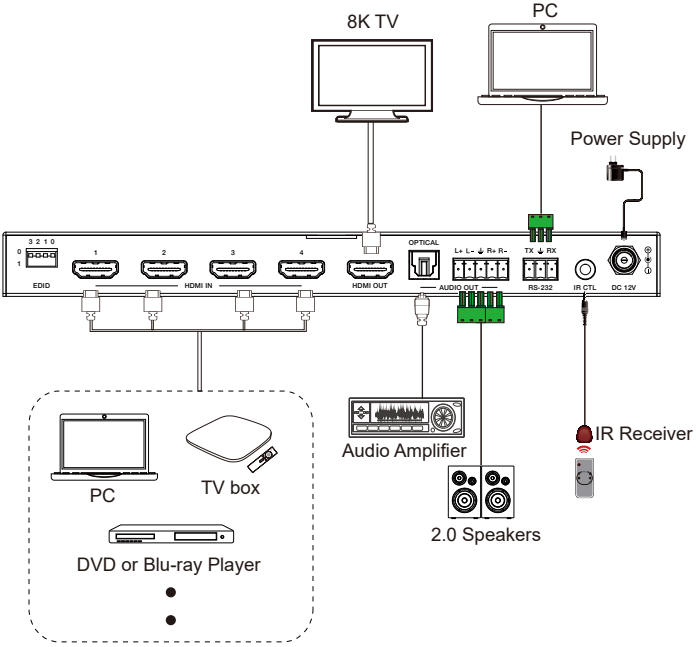

HIGH-DEFINITION MULTIMEDIA INTERFACE

The terms HDMI and HDMI High-Definition Multimedia interface, and the HDMI Logo are trademarks or registered trademarks of HDMI Licensing LLC in the United States and other countries.