Lideo

Lideo PTZ-20X

1080P HD Smart PTZ Camera

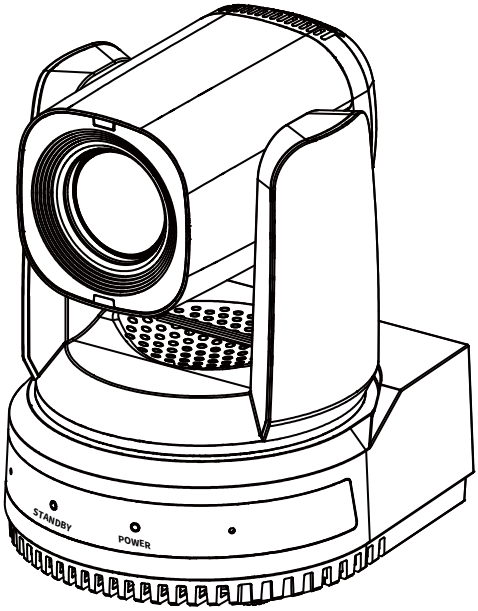

USER MANUAL

Copyright

All contents of this manual, whose copyright belongs to our corporation, cannot be cloned, copied or translated without the permission of our corporation.

Notice

Product specifications and information which were referred to in this document are for reference only. We may change, delete, or update any content at any time and without prior notice.

FCC NOTICE (Class A)

This product complies with Part 15 of the FCC Rules. The operation is subject to the following two conditions: (1) this device may not cause harmful interference, and (2) this device must accept any interference received, including interference that may cause undesired operation.

Note

This product has been tested and found to comply with the limits for a Class A digital device, pursuant to Part 15 of the FCC Rules. These limits are designed to provide reasonable protection against harmful interference in a residential installation. This equipment generates uses and can radiate radio frequency energy and, if not installed and used in accordance with the instructions, may cause harmful interference to radio communications. However, there is no guarantee that interference will not occur in a particular installation. If this equipment does cause harmful interference to radio or television reception, which can be determined by turning the equipment off and on, the user is encouraged to try to correct the interference by one or more of the following measures:

- Reorient or relocate the receiving antenna.
- Increase the separation between the equipment and receiver.
- Connect the equipment into an outlet on a circuit different from that to which the receiver is connected.
- Consult the dealer or an experienced radio/television technician for help.

Class A ITE

Class A ITE is a category of all other ITE which satisfies the class A ITE limits but not the class B ITE limits. Such equipment should not be restricted in its sale but the following warning shall be included in the instructions for use:

Warning

Operating this equipment in a residential environment may cause radio interference.

European Community Compliance Statement (Class A)

This product is herewith confirmed to comply with the requirements set out in the Council Directives on the Approximation of the laws of the Member States relating to Electromagnetic Compatibility Directive 2014/30/EU.

Catalogue

1 Safety Precautions 1
2 Packing List 1
3 Quick Start 1
4 Video Format 2
5 About Product 2
5.1 Features 2
5.2 Specifications 2
5.3 Interface and Switch 4
5.4 Dimension 4
5.5 Installation 5
5.6 Remote Control 6
6 GUI Settings 7
6.1 Menu 7
6.2 Exposure 7
6.3 Color 7
6.4 Image 8
6.5 Display 8
6.6 P/T/Z Setting 8
6.7 Setting 9
6.8 Version 9
6.9 Default 9
7 WEB Settings 9
7.1 Access Camera 9
7.2 Control Camera 9
7.3 Video Settings 11
7.4 Image Settings 11
7.5 Audio Settings 12
7.6 System Settings 12
7.7 Network Settings 12
7.8 NDI® Settings 13
7.9 Device Information 14
7.10 Download Upgrade Program 14
8 Troubleshooting 14

1 Safety Precautions

- During the installation and use of the equipment, all electrical safety regulations of the country and region of use must be strictly observed.
- Please use the power adapter that comes standard with this product.
- Please do not connect multiple devices to the same power adapter (exceeding the capacity of the adapter may generate excessive heat or cause a fire).
- Do not rotate head of the camera by hand, otherwise it may cause mechanical failure.
- When installing this product on a wall or ceiling, secure the device securely. When installing, make sure that there are no obstacles within the rotation range of the gimbal; do not turn on the power until all installations are completed.
- To avoid heat build-up, keep ventilation around the device smooth.
- If the device emits smoke, smells, or makes noises, please turn off the power immediately and unplug the power cord, and contact the dealer in time.
- This device is not waterproof, please keep the device dry.
- This product has no user serviceable parts, damage caused by disassembly by the user is not covered by the warranty.

Notice

Specific frequencies of electromagnetic field may affect the image of the camera!

2 Packing List

Name	Quantity
Camera	1
Power Adapter	1
Power Cable	1
RS232 Cable	1
USB Cable	1
Remote Control	1
User Manual	1

3 Quick Start

1) Please check connections are correct before starting.

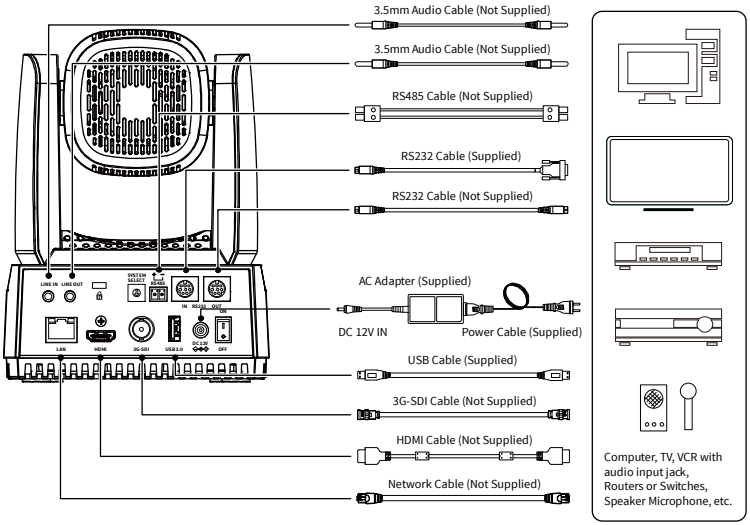

2) Connect the power adapter to the power connector on the rear panel of the camera. The power indicator on the front panel of the camera is on.
3) After the camera is powered on, it starts to initialize, right up to the limit position, and then both horizontal and vertical go to the middle position, the motor stops running, and the initialization is completed.
(Note: If preset 0 is saved, PTZ will be move to preset 0)

4 Video Format

Video Format			
0	1080P60	8	-
1	1080P50	9	-
2	1080I60	A	1080P59.94
3	1080I50	B	1080I59.94
4	720P60	C	1080P29.97
5	720P50	D	-
6	1080P30	E	-
7	1080P25	F	720P59.94

5 About Product

5.1 Features

- **60.7° Wide-angle Lens + 20x Optical Zoom**

60.7° high-quality ultra-wide-angle lens, optical zoom up to 20x, support 16x digital zoom.

- **1080P Full HD**

Using 1/2.8-inch high-quality HD CMOS sensor with effective 2.07 million pixels, it can achieve high-quality images with a maximum resolution of 1920x1080.

- **New ISP Image Processing Algorithm**

The new generation of ISP image processing algorithm provides more complete white balance and automatic exposure functions, which significantly improves the image output performance of the camera, and the imaging effect is also better. Widely used in education recording and broadcasting, distance education, video conferencing, live broadcasting, broadcasting and other industries.

- **Upgraded AI Technology**

Using upgraded AI technology, through face recognition, it can accurately determine the location of people, realize automatic tracking and automatic frame selection.

- **1080P60 NDI®|HB (Optional)**

It supports 1080P60 NDI®|HB technology, ultra-low latency high-quality audio and video signal transmission, and can achieve unparalleled ultra-high-resolution image quality and lossless effects that are closer to vision.

- **Leading Auto Focus Technology**

Using advanced focusing algorithm, the lens can focus quickly, accurately and stably.

- **Audio Processing Algorithm**

The exclusive audio processing algorithm can eliminate reverberation, effectively reduce environmental noise, and support EQ adjustment to optimize sound effects; the device supports dual mic pickup, and can also be connected to external microphones, wireless bees, etc., to meet the pickup needs of most scenarios.

- **Multiple Interfaces**

Support HDMI and 3G-SDI interface, effective transmission distance of 3G-SDI is up to 150 meters (1080P30). HDMI, 3G-SDI, LAN can output three HD digital signals at the same time.

- **Remote Control**

Through the RS232 and RS485 serial ports, the camera can be controlled remotely.

5.2 Specifications

Camera	
Signal System	1080P60, 1080P59.94, 1080P50, 1080I60, 1080I59.94, 1080I50, 1080P30, 1080P29.97, 1080P25, 720P60, 720P59.94, 720P50
Sensor	1/2.8 inch, CMOS, Effective pixels: 2.07M

Scanning Mode	Progressive
Lens	20x, f = 4.42mm ~ 88.5mm, F1.8 ~ F2.8
Digital Zoom	16x
Minimum Illumination	0.5 Lux @ (F1.8, AGC ON)
Shutter	1/30s ~ 1/10000s
White Balance	Auto, VAR, Manual, One Push, Indoor, Outdoor
Backlight Compensation	Support
Digital Noise Reduction	2D & 3D Digital Noise Reduction
SNR	≥55dB
Horizontal FOV	60.7° ~ 3.36°
Vertical FOV	34.1° ~ 1.89°
Pan Angle	±170°
Tilt Angle	-30° ~ +90°
Pan Speed	1.7° ~ 100°/s
Tilt Speed	1.7° ~ 69.9°/s
Image Flip	Support
Image Freeze	Support
Preset Position	255
Preset Accuracy	0.1°
Audio Features	
Microphone Array	Built-in dual microphones, 100Hz to 16KHz frequency response
Audio Input	Support LINE IN audio input
Audio Output	Support LINE OUT, HDMI, USB and other audio output
USB Features	
Operate System	Windows 7/8/10, Mac OS X, Linux, Android
Color System / Compression	YUY2/MJPEG/H.264
USB Audio	Support
USB Video Protocol	UVC 1.1/UVC 1.5
UVC PTZ Control	Support

Network Features	
Video Compression	H.264/H.265
Video Stream	First Stream, Second Stream
First Stream Resolution	1920x1080, 1280x720, 1024x576, 960x540, 640x480, 640x360
Second Stream Resolution	1280x720, 1024x576, 720x480, 640x360, 480x272, 320x240, 320x180
Video Bit Rate	32Kbps ~ 20480Kbps
Bit Rate Control	CBR, VBR
Frame Rate	1fps ~ 60fps
Audio Compression	AAC
Audio Bit Rate	96Kbps, 128Kbps, 256Kbps
Protocols	NDI, TCP/IP, HTTP, RTSP, RTMP/RTMPS, ONVIF, DHCP, SRT, Multicast
Interfaces	
LINE IN Interface	1 x LINE IN: 3.5mm Audio Interface
LINE OUT Interface	1 x LINE OUT: 3.5mm Audio Interface
Communication Interface	1 x RS485: 2pin phoenix port, Max Distance: 1200m, Protocol: VISCA/ Pelco-D/Pelco-P
	1 x RS232 IN: 8pin Min DIN, Max Distance: 30m, Protocol: VISCA/Pelco-D/ Pelco-P
	1 x RS232 OUT: 8pin Min DIN, Max Distance: 30m, Protocol: VISCA network use only
Network Interface	1 x LAN: 10M/100M Adaptive Ethernet Port
HDMI Interface	1 x HDMI: Version 1.3
3G-SDI Interface	1 x 3G-SDI: BNC type, 800mVp-p, 75Ω. Along to SMPTE 424M standard
USB Interface	1 x USB 3.0: Type A
Power Jack	JEITA type (DC IN 12V)

General Specifications	
Input Voltage	DC 12V
Input Current	Max. 1.2A
Operating Temperature	0°C ~ 40°C
Storage Temperature	-40°C ~ 60°C
Power Consumption	Max. 15W
Dimension	146mm x 169mm x 168mm
Net Weight	About 1.5Kg

Note Product specifications and parameters are subject to change without notice.

5.3 Interface and Switch

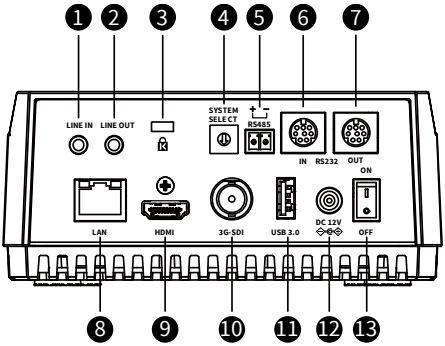

Item	Description
1	LINE IN Interface
2	LINE OUT Interface
3	Security Slot
4	System Select Switch
5	RS485 Interface
6	RS232 IN Interface
7	RS232 OUT Interface
8	LAN Interface
9	HDMI Interface
10	3G-SDI Interface
11	USB 3.0 Interface
12	DC 12V Interface
13	Power Switch

5.4 Dimension

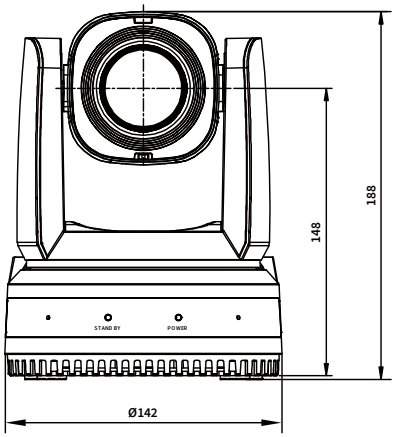

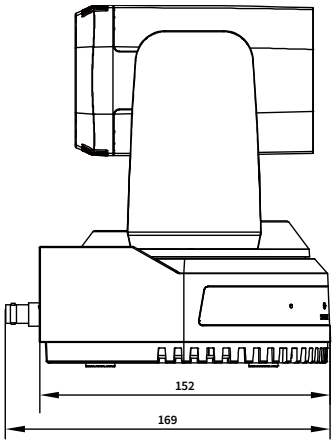

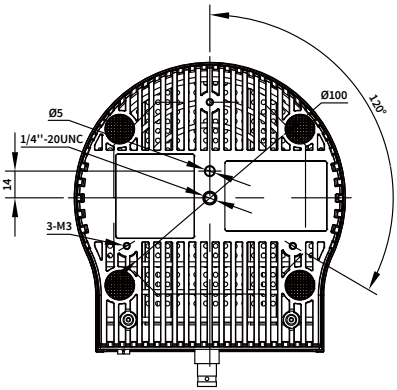

5.5 Installation

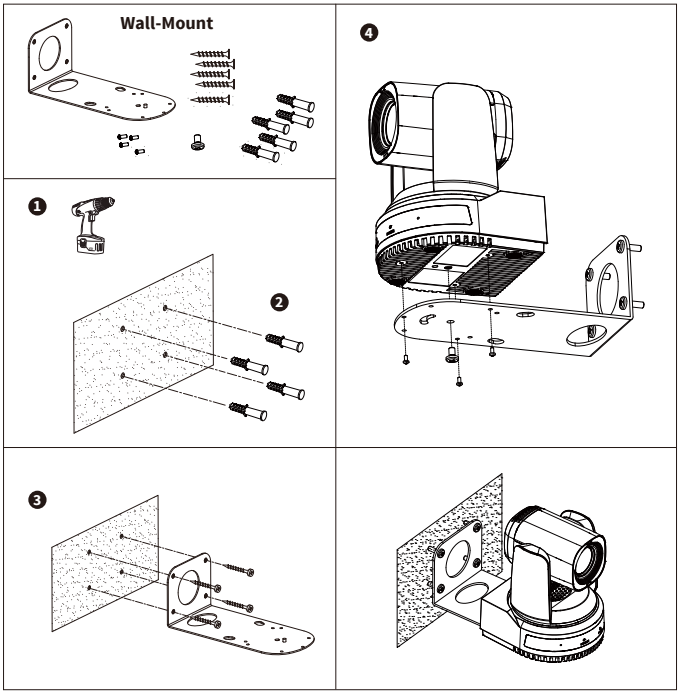

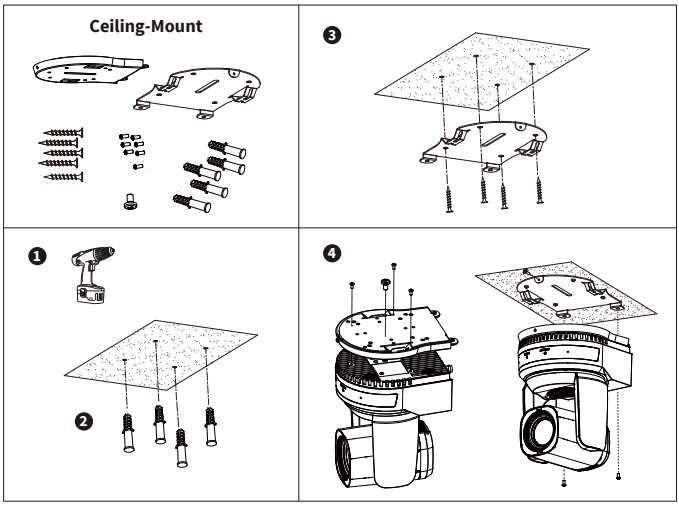

Note

The installation diagram is for reference only. The brackets and screws are not standard. For packing accessories, please refer to the actual product.

5.6 Remote Control

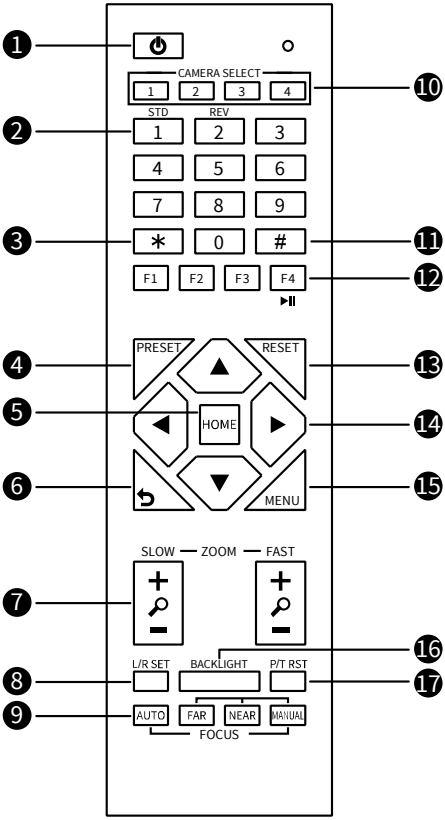

Key Description
1. Standby Key
Press to enter standby mode
2. Number Key
Press to set preset or call preset
3. *Key
Use with other keys
4. PRESET Key
Set preset: [PRESET] + Number key (0-9)
5. HOME Key
Confirm selection or press to turn PTZ back to the middle position
6. Return Key
Press to return to the previous menu
7. ZOOM Key
● SLOW: Zoom In [+] or Zoom Out [-] slowly ● FAST: Zoom In [+] or Zoom Out [-] fast
8. L/R SET Key
● Standard: Simultaneously press L/R SET + 1 ● Reverse: Simultaneously press L/R SET + 2
9. FOCUS Key
Auto/Manual/Far/Near focus
10. CAMERA SELECT Key
Press to select and control the camera
11. # Key
Use with other keys
12. IR Remote Control Key
[*]+[#]+[F1]: Address 1 [*]+[#]+[F2]: Address 2 [*]+[#]+[F3]: Address 3 [*]+[#]+[F4]: Address 4
13. RESET Key
Clear preset position: [RESET] + Number key (0-9)
14. PTZ Control Key
PTZ moved according to the arrow indicates
15. MENU Key
Press to enter or exit OSD Menu
16. BACKLIGHT Key
Backlight ON/OFF: Press repeatedly to enable or disable the backlight compensation. NOTE: ● Effective only in auto exposure mode. ● If there is a light behind the subject, the subject will become dark, press the backlight key to enable the backlight compensation. Press again to disable this function.
17. P/T RST (PTZ Reset) Key
PTZ starts to self-test after pressed it
Shortcut Set
[*]+[#]+[1]: OSD menu default English [*]+[#]+[3]: OSD menu default Chinese [*]+[#]+[4]: Display current IP address [*]+[#]+[6]: Quickly recover the default [*]+[#]+[8]: View the camera version [*]+[#]+[9]: Quickly set up inversion [*]+[#]+[MANUAL]: Restore default IP address

6 GUI Settings

6.1 Menu

Press [MENU] key to display the main menu on the normal screen, using arrow key to move the cursor to the item to be set. Press the [HOME] key to enter the corresponding sub-menu.

Menu	
ENG/中文	ENG
AI MODE	Off
Video Format	1080P60
Style	Default
Exposure	->
Color	->
Image	->
Display	->
PTZ Setting	->
Setting	->
Version	->
Default	->

[MENU] Return / [HOME] Enter

ENG/中文: ENG，中文.

AI MODE: Off, Single Track, Frame Track, Demo Mode.

Video Format: 1080P60, 1080P50, 1080I60, 1080I50, 1080P30, 1080P25, 720P60, 720P50.

Style: Default, Cold, Warm, Clear, Soft, User1, User2, User3.

6.2 Exposure

Move the main menu cursor to [Exposure], and press [HOME] key enter the exposure page, as shown in the following figure.

Exposure		
>	AE	Auto
	Flicker	50Hz
	Expcomp Mode	On
	Expmode	2
	Backlight	Off
	Gain Limit	15
	DRC Mode	Off

[MENU] Return / [HOME] Enter

AE: Auto, Manual, Iris Priority, Shutter Priority, Bright Priority.

Flicker: Off, 50Hz, 60Hz (Effective only in Auto, Iris Priority, Bright Priority mode).

Expcomp Mode: On, Off (Effective only in Auto, Iris Priority mode).

Expmode: -7~7 (Effective only in Expcomp Mode to On).

Backlight: On, Off (Effective only in Auto, Iris Priority mode).

Bright: 0~99 (Effective only in Bright Priority mode).

Gain Limit: 0~32 (Effective only in Auto, Iris Priority, Bright Priority mode).

Iris: F1.8, F2.0, F2.4, F2.8, F3.4, F4.0, F4.8, F5.6, F6.8, F8.0, F9.6, F11, Off (Effective only in Manual, Iris Priority mode).

Shutter: 1/30, 1/50, 1/60, 1/90, 1/100, 1/125, 1/180, 1/250, 1/350, 1/500, 1/725, 1/1000, 1/1500, 1/2000, 1/3000, 1/4000, 1/6000, 1/10000 (Effective only in Manual, Shutter Priority mode).

Gain: 0~31 (Effective only in Manual, Shutter Priority mode).

DRC Mode: Manual, Auto, Off.

DRC: 0~14 (Effective only in DRC Mode to Manual).

6.3 Color

Move the main menu cursor to [Color], and press [HOME] key enter the color page, as shown in the following figure.

Color		
>	AWB	Auto
	Sens	Low
	R-Tuning	0
	B-Tuning	0
	Hue	50
	Saturation	100

[MENU] Return / [HOME] Enter

AWB: Auto, VAR, Manual, One Push, Indoor, Outdoor.

Sens: Low, Middle, High.

R-Gain: 0~1023 (Effective only in Manual, One Push mode).
B-Gain: 0~1023 (Effective only in Manual, One Push mode).
R-Tuning: -128~128 (Effective only in Auto, Temp, One Push mode).
B-Tuning: -128~128 (Effective only in Auto, Temp, One Push mode).
Hue: 0~99.
Saturation: 0~200.
Temp: 2000 ~ 8500 (Effective only in Temp mode).

6.4 Image

Move the main menu cursor to [Image], and press [HOME] key enter the image page, as shown in the following figure.

Image		
>	Brightness	50
	Contrast	50
	Sharpness Mode	Auto
	Gamma Mode	Manual
	Gamma	Ext
	NR-2D Mode	Auto
	NR-3D Mode	Auto

[MENU] Return / [HOME] Enter

Brightness: 0~99.
Contrast: 0~99.
Sharpness Mode: Manual, Auto.
Sharpness: 0~25 (Effective only in Sharpness Mode to Manual).
Gamma Mode: Manual, Auto.
Gamma: Ext, 0.45, 0.5, 0.54, 0.56, 0.63 (Effective only in Gamma Mode to Manual).
NR-2D Mode: Manual, Auto.
NR-2D: 0~99 (Effective only in NR-2D Mode to Manual).
NR-3D Mode: Manual, Auto.
NR-3D: 0~15 (Effective only in NR-3D Mode to Manual).

6.5 Display

Move the main menu cursor to [Display], and press [HOME] key enter the display page, as shown in the following figure.

Display		
>	OSD-Dir	0
	Frac Rate	Off
	HDMI Mode	HDMI
	SDI Mode	Level A
	Flip-H	Off
	Flip-V	Off
	Freeze	Off

[MENU] Return / [HOME] Enter

OSD-Dir: 0, 90, 180, 270.
Frac Rate: On, Off.
HDMI Mode: HDMI, DVI.
SDI Mode: Level A, Level B.
Flip-H: On, Off.
Flip-V: On, Off.
Freeze: On, Off.

6.6 P/T/Z Setting

Move the main menu cursor to [P/T/Z Setting], and press [HOME] key enter the P/T/Z setting page, as shown in the following figure.

P/T/Z Setting		
>	AF-Sense	High
	AF-Zone	Front
	Focus Limit	Off
	LR Mode	STD
	Motion Sync	Off
	Horizontal Speed	23
	Vertical Speed	19
	Zoom Speed	7
	PTbyZoom	On

[MENU] Return / [HOME] Enter

AF-Sense: High, Normal, Low.
AF-Zone: Front, Top, Center, Bottom.
Focus Limit: On, Off.
Near Focus Limit: 1M, 1.5M, 2M, 3M, 4M, 5M, 6M, 8M, 10M, 15M, 20M (Effective only in Focus Limit to On).

Far Focus Limit: 15M, 20M, Infinity (Effective only in Focus Limit to On).
LR Mode: STD, REV.
Motion Sync: On, Off.
Horizontal Speed: 0~23.
Vertical Speed: 0~19.
Zoom Speed: 0~7.
PTbyZoom: On, Off.

6.7 Setting

Move the main menu cursor to [Setting], and press [HOME] key enter the setting page, as shown in the following figure.

Setting

>	Visca Addr	1
	Visca Mode	Series
	Baud Rate	9600
	DHCP	Off
	IP Addr	192.168.100.88
	MAC	d4e08e548d13

[MENU] Return / [HOME] Enter

Visca Addr: 1~7 (Effective only in VISCA protocol).
Visca Mode: Serial, Paral.
Baud Rate: 2400, 4800, 9600, 19200, 38400, 57600, 115200.
DHCP: On, Off.
IP Addr: 192.168.100.88.
MAC: d4e08e548d13.

6.8 Version

Move the main menu cursor to [Version], and press [HOME] key enter the version page, as shown in the following figure.

Version

Main	X8.02.15
AF	14.04.04
Date	2022-08-18
Code	VF1
NDI License	Okay

[MENU] Return / [HOME] Enter

Main: Display the version number of the main program of the camera.
AF: Display the camera autofocus version number.
Date: Display the burning date of the main program version of the camera.
Code: Display the camera code.
NDI License: Display NDI license verification results.

6.9 Default

Move the main menu cursor to [Default], press [HOME] key enter default page, as shown in the following figure.

Default

>	Reset	No

[MENU] Return / [HOME] Enter

Reset: Yes, No.

Note GUI menu and parameters are subject to change without notice.

7 WEB Settings

7.1 Access Camera

Access http://192.168.100.88 to pop up the login window, then input username (default: admin) and password (default: admin). After login, it will show as below:

7.2 Control Camera

All pages include two menu bars:
Real time monitoring: displaying video image
Parameter setup: with function buttons.

A. Video Viewing Window

Video viewing window must be same as video resolution, the bigger the resolution is, the bigger the playing area is. Double click viewing window, will show full-screen, double click again, will return to initialized size.

Status bar in viewing window shown as below:

1) Video playback pause button: control real-time video pause, stop the last picture, click recoverable video again.
2) Audio control buttons: can adjust the volume or set silent mode.
3) Full screen switch button.

B. PTZ Setup

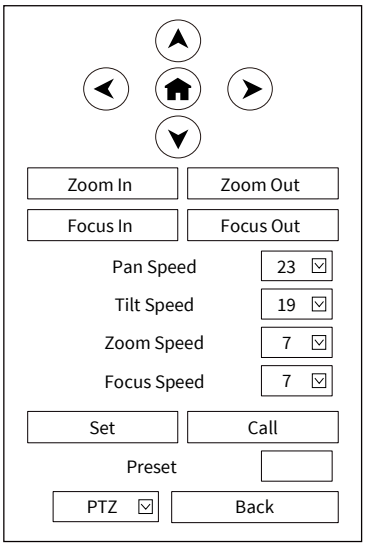

1) Pan and Tilt Control

Up, Down, Left and Right arrows and the home button allow you to manually drive the camera to the desired position.

2) Zoom

Zoom In and Zoom Out buttons allow for wide or narrow view of the space.

3) Focus

Focus In and Focus Out buttons allow for fine manual focus adjustment if the camera has any problems auto focusing on the difficult object.

4) PTZ Speeds

Pan speed can be set at any rate between 1 ~ 24, Tilt speed can be set at any rate between 1 ~ 20. Zoom and Focus speeds can be set at any rate between 1 ~ 7.

5) PTZ Presets

After manually setting up a shot that you would like to return to later, you can save presets for quick recall of these positions. Type a number between 0 and 254 into the Preset box. Click the “Set” button to save the current location with that preset number. Click the “Call” button to cause the camera to return to that position. This enables smooth, quick and convenient control without the need to manually drive the camera. You can set up preset that user want as below.

Method: Type preset number into the Preset box.

Preset: Optional items: 0 ~ 254.

6) PTZ/OSD Dropdown

From the dropdown menu, clicking the OSD option will open the on-screen display menu of the camera giving you control from within the IP interface.

C. Language Selection

Click either “Chinese”, “English” or “Russian” to change the language of the webpage.

7.3 Video Settings

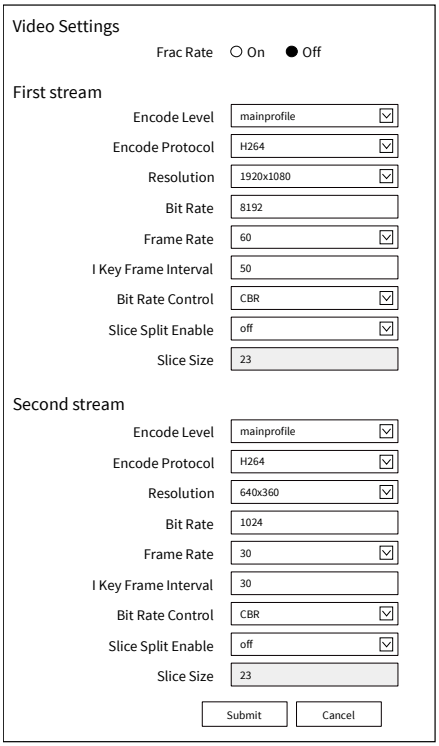

1) Frac Rate

Turn On/Off Frac Rate.

2) Encode Level

Support baseline, mainprofile, highprofile and svc-t four levels.

3) Encode Protocol

Support H.264 and H.265 protocols.

4) Resolution

First stream support 1920x1080, 1280x720, 1024x576, 960x540, 640x480, 640x360. Second stream support 1280x720, 1024x576, 720x480, 640x360, 480x272, 320x240, 320x180; The bigger resolution is, the clearer the image will be, more network bandwidth will be taken.

5) Bit Rate

The user can specify the bit rate. Generally speaking, the larger of the bit rate, the clearer of the image. However, the configuration of the bit rate needs to be combined with the network bandwidth. When the network bandwidth is narrow and the bit rate is configured larger, the video stream cannot be transmitted normally, and the visual effect is worse.

6) Frame Rate

User can specify the size of the frame rate, generally, the frame rate greater, the image more smooth; Frame rate is smaller, the more sense of beating.

7) I Key Frame Interval

Set interval between 2 I frame, the bigger interval is the response will be lower from viewing window.

8) Bit Rate Control

Code stream control way:

CBR (Constant Bit Rate): Video coder will be coding according to preset speed.

VBR (Variable Bit Rate): Video coder will adjust the speed based on preset speed to gain the best image quality.

9) Slice Split Enable

Enable or disable slice split function.

10) Slice Size

Set the size of slice.

7.4 Image Settings

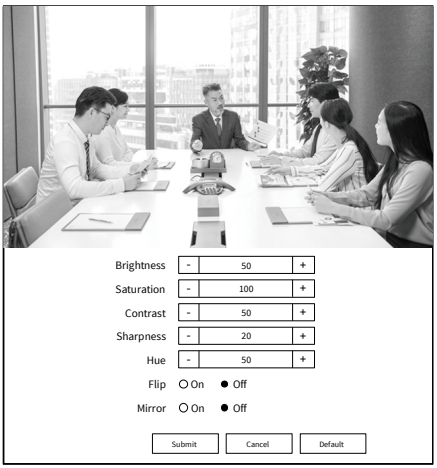

1) Brightness

Brightness of image: 0~99 (Default value is 50).

2) Saturation

Saturation of image: 0~200 (Default value is 100).

3) Contrast

Contrast of image: 0~99 (Default value is 50).

4) Sharpness

Sharpness of image: 0~99 (Default value is 20).

5) Hue

Hue of image: 0~99 (Default value is 50).

6) Flip

Turn On/Off the Flip function.

7) Mirror

Turn On/Off the Mirror function.

7.5 Audio Settings

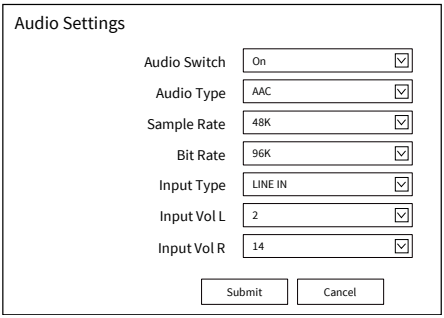

1) Audio Switch

Turn On/Off audio switch.

2) Audio Type

Optional items: AAC.

3) Sample Rate

Optional items: 32K, 48K.

4) Bit Rate

Optional items: 96K, 128K, 256K.

5) Input Type

Optional items: LINE IN, MIC.

6) Input Vol L

The volume of the left channel.

7) Input Vol R

The volume of the right channel.

7.6 System Settings

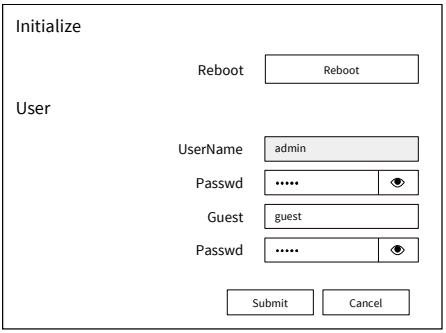

1) Reboot

Click the “Reboot” button, system restart.

2) Username and Password

The user can modify the password (letters and Numbers only).

7.7 Network Settings

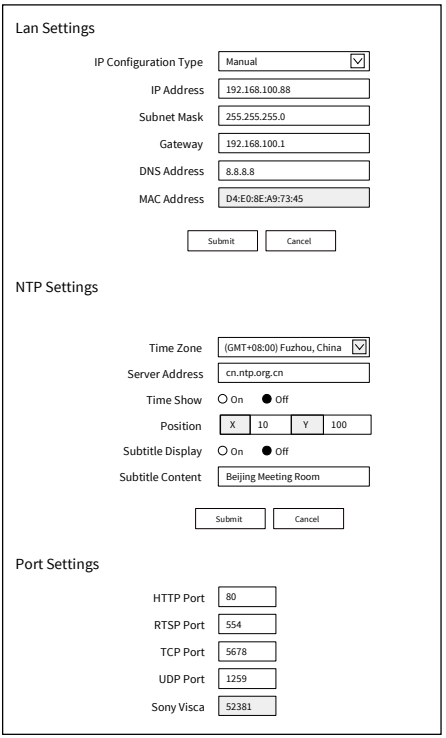

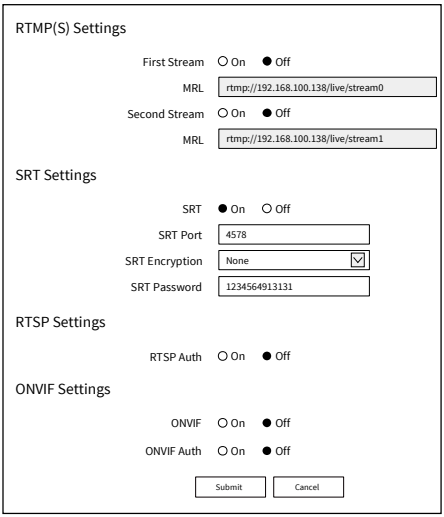

1) Lan Settings

Default the IP address is 192.168.100.88, the MAC address cannot be modified.

2) NTP Settings

Setting NTP Time Zone and Server Address. Turn On/Off Time Show, set the position of the Time Show. Turn On/Off Subtitle Display, set the Subtitle Content of the camera screen.

3) Port Settings

A. HTTP Port

IP address identifies network device, the device can run multiple web applications, each network program using network port to transmit data, so data transmission to be carried out between the port and port. Port setting is to set up web server program using which port to transmit. When port mapping, need to be consistent with the port number (default port: 80).

B. RTSP Port

The camera support RTSP protocol, use the VLC tools broadcast, default port: 554.

C. TCP Port

Support TCP connection then control camera, default port: 5678.

D. UDP Port

Support UDP protocol, default port: 1259.

E. Sony Visca

Support Sony Visca, default value: 52381.

4) RTMP(S) Settings

Turn On/Off first stream or second stream, setting the MRL of RTMP.

5) SRT Settings

Turn On/Off SRT, Setting the SRT Port, SRT Encry and SRT Password.

6) RTSP Settings

Turn On/Off RTSP Auth.

7) ONVIF Settings

Turn On/Off ONVIF and ONVIF Auth.

7.8 NDI® Settings (Optional)

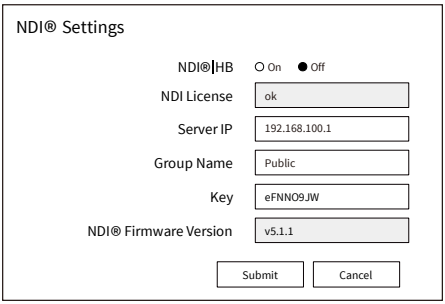

1) NDI®|HB

Turn On/Off NDI®|HB.

2) NDI License

Display NDI License verification results.

3) Server IP

Setting NDI® Server IP address.

4) Group Name

Setting NDI® Group Name.

5) Key

Setting NDI® Key.

6) NDI® Firmware Version

Display NDI® Firmware Version.

7.9 Device Information

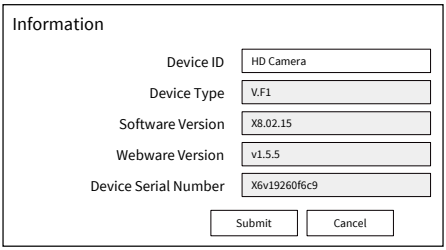

7.10 Download Upgrade Program

If you need the camera upgrade program, please contact the manufacturer.

Note WEB interface and parameters are subject to change without notice.

8 Troubleshooting

Image

- The monitor shows no image

1) Check that the camera power supply is connected, the voltage is normal, and the power indicator light is always on.
2) Turn off the power switch to check whether the camera is self-testing.
3) Check the cable of video platform and TV whether correct connection.

- The video image displayed by the camera lens is jittery

1) Check whether the camera installed position be stabled.
2) Check whether have vibrating machinery or object near the camera.

- There is no video image in Browser

IE browser does not support H5, you need to use VLC plug-in to view videos. Please access VLC website (http://www.videolan.org/vlc) download and install the 32-bit VLC media player, after it installed, access camera will have normal image display. Other mainstream browsers already support H5 and do not need to install the VLC plug-in.

- Unable to access camera through Browser

1) Using PC to access the network to test whether the network access can work properly, first of all, the network fault caused by the PC virus can be eliminated, until the PC and camera can communicate with each other Ping.
2) Disconnect the network, connect camera and PC separately, and reset the IP address of PC.
3) Check IP address, subnet mask, and gateway settings for camera.
4) Check whether the MAC address is conflicts.
5) Check whether the web port is modified. The default web port is 80.

- Forget the IP address or login password

Please remember (The default IP address: 192.168.100.88; default user name: admin; default password: admin).

Control

- Remote control cannot control

1) Check and replace the new battery for the remote controller.
2) Check whether the camera working mode is correct.
3) Check whether the address of remote control can match the camera.

- Serial port cannot control

1) Check whether the camera protocol, address and baud rate such is the same.
2) Check whether the control line is connected well.